Installation, Operation, and Maintenance

Split System Air Conditioners Odyssey™

Air Handler — 5 to 25 Tons

Model (60 Hz)	Model (50 Hz)
TWE061D/E***A	TWE051D***A
TWE090D/E**BA	TWE076D/E***A
TWE120D/E**BA	TWE101D/E***A
TWE150E**BA	TWE126E***A
TWE180E**BA	TWE156E***A
TWE240E**BA	TWE201E***A
TWE300E**BA	TWE251E***A

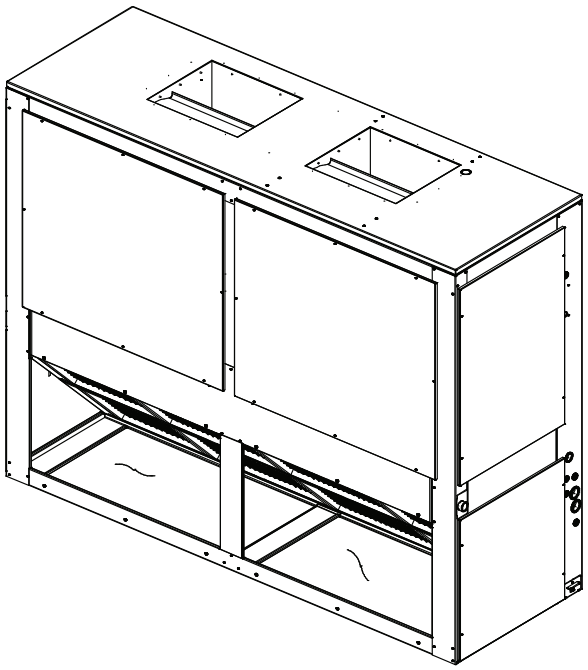

⚠ SAFETY WARNING

Only qualified personnel should install and service the equipment. The installation, starting up, and servicing of heating, ventilating, and air-conditioning equipment can be hazardous and requires specific knowledge and training. Improperly installed, adjusted or altered equipment by an unqualified person could result in death or serious injury. When working on the equipment, observe all precautions in the literature and on the tags, stickers, and labels that are attached to the equipment.

March 2015

SSA-SVX06E-EN

Ingersoll Rand

Introduction

Read this manual thoroughly before operating or servicing this unit.

Warnings, Cautions, and Notices

Safety advisories appear throughout this manual as required. Your personal safety and the proper operation of this machine depend upon the strict observance of these precautions.

The three types of advisories are defined as follows:

⚠WARNING	Indicates a potentially hazardous situation which, if not avoided, could result in death or serious injury.
⚠CAUTION	Indicates a potentially hazardous situation which, if not avoided, could result in minor or moderate injury. It could also be used to alert against unsafe practices.
NOTICE	Indicates a situation that could result in equipment or property-damage only accidents.

Important Environmental Concerns

Scientific research has shown that certain man-made chemicals can affect the earth's naturally occurring stratospheric ozone layer when released to the atmosphere. In particular, several of the identified chemicals that may affect the ozone layer are refrigerants that contain Chlorine, Fluorine and Carbon (CFCs) and those containing Hydrogen, Chlorine, Fluorine and Carbon (HCFCs). Not all refrigerants containing these compounds have the same potential impact to the environment. Trane advocates the responsible handling of all refrigerants-including industry replacements for CFCs such as HCFCs and HFCs.

Important Responsible Refrigerant Practices

Trane believes that responsible refrigerant practices are important to the environment, our customers, and the air conditioning industry. All technicians who handle refrigerants must be certified. The Federal Clean Air Act (Section 608) sets forth the requirements for handling, reclaiming, recovering and recycling of certain refrigerants and the equipment that is used in these service procedures. In addition, some states or municipalities may have additional requirements that must also be adhered to for responsible management of refrigerants. Know the applicable laws and follow them.

⚠ WARNING

Proper Field Wiring and Grounding Required!

All field wiring MUST be performed by qualified personnel. Improperly installed and grounded field wiring poses FIRE and ELECTROCUTION hazards. To avoid these hazards, you MUST follow requirements for field wiring installation and grounding as described in NEC and your local/state electrical codes.

⚠ WARNING

Personal Protective Equipment (PPE) Required!

Technicians, in order to protect themselves from potential electrical, mechanical, and chemical hazards, MUST follow precautions in this manual and on the tags, stickers, and labels, as well as the instructions below:

- **Before installing/servicing this unit, technicians MUST put on all PPE required for the work being undertaken (Examples; cut resistant gloves/sleeves, butyl gloves, safety glasses, hard hat/bump cap, fall protection, electrical PPE and arc flash clothing). ALWAYS refer to appropriate Material Safety Data Sheets (MSDS)/Safety Data Sheets (SDS) and OSHA guidelines for proper PPE.**
- **When working with or around hazardous chemicals, ALWAYS refer to the appropriate MSDS/SDS and OSHA/GHS (Global Harmonized System of Classification and Labelling of Chemicals) guidelines for information on allowable personal exposure levels, proper respiratory protection and handling instructions.**
- **If there is a risk of energized electrical contact, arc, or flash, technicians MUST put on all PPE in accordance with OSHA, NFPA 70E, or other country-specific requirements for arc flash protection, PRIOR to servicing the unit. NEVER PERFORM ANY SWITCHING, DISCONNECTING, OR VOLTAGE TESTING WITHOUT PROPER ELECTRICAL PPE AND ARC FLASH CLOTHING. ENSURE ELECTRICAL METERS AND EQUIPMENT ARE PROPERLY RATED FOR INTENDED VOLTAGE.**

©2015 Trane All rights reserved

⚠ WARNING

Refrigerant under High Pressure!

System contains oil and refrigerant under high pressure. Recover refrigerant to relieve pressure before opening the system. See unit nameplate for refrigerant type. Do not use non-approved refrigerants, refrigerant substitutes, or refrigerant additives.

⚠ WARNING

R-410A Refrigerant under Higher Pressure than R-22!

The units described in this manual use R-410A refrigerant which operates at higher pressures than R-22. Use ONLY R-410A rated service equipment or components with these units. For specific handling concerns with R-410A, please contact your local Trane representative.

Copyright

This document and the information in it are the property of Trane, and may not be used or reproduced in whole or in part without written permission. Trane reserves the right to revise this publication at any time, and to make changes to its content without obligation to notify any person of such revision or change.

Trademarks

All trademarks referenced in this document are the trademarks of their respective owners.

Revision History

- With the change to Microchannel, the Odyssey split system now offers a 50Hz, 6.25 standard air handler (TWE076E) and a 60Hz, 7.5 ton standard/SZVAV/2-Speed VFD air handler (TWE090E). See performance data for additional details on this new split system.
- Odyssey air handlers now have the ability to convert from Single Zone VAV to 2–Speed Fan control in order to comply with certain sections of California Title 24 and ASHRAE 90.1. See "Installation, 2-Speed VFD Units," p. 25 for configuration details.

Table of Contents

Model Number Description 5
- Air Handler 5

General Information 6
- Unit Description 6

Pre-Installation 7
- Unit Inspection 7
  - Inspection Checklist 7
- Testing for Leaks 7
- Lifting Recommendations 7
- Repositioning Drain Pan 7
- Field Conversion to 460 Volt 9
  - Converting Motor to 460 Volt 9
- Refrigerant Piping 9
  - Reorienting Evaporator Coil (TWE126/150 and 156/180) 9
  - Preparation for Refrigerant Piping 10
- Installations, Limitations and Recommendations 10

Dimensional Data 11

Weights 20
- Air Handler 20

Installation 22
- Horizontal Suspension 22
  - Leveling 22
  - Auxiliary Drain Pan 22
- Refrigerant Piping 22
- Condensate Piping 23
- Filter Replacement 23
- Duct Connections 24
- Air Flow Settings 24
  - Standard Units 24
  - SZVAV Units 24
  - 2-Speed VFD Units 25
  - Minimum Supply Fan Output 25
- Electrical Connections 26
- Setpoints 26
  - EDC Switch Wiring 27
  - Heating and Cooling Setpoint Arbitration 27
- Checkout Procedure 28
- Installation Checklist 28
- Thermostat and Control Connections 29
  - Electromechanical Controls 29
  - ReliaTel Controls 29

Electrical Data 31
- 60 Hz Models 31
- 50 Hz Models 40

Start-Up 42
- Sequence of Operation 42
  - Variable Air Volume Applications (SZVAV) 42
  - 2–Speed VFD Applications 43

Maintenance 44
- Fan Belt Adjustment 44
- Monthly 44
- Annually (Cooling Season) 45
- Coil Cleaning 45
- Maintenance Log 46

Wiring Diagram Matrix 47

Model Number Description

Air Handler

TWE	240	E	D	00	*	*
1 2 3	4 5 6	7	8	9 10	11	12

TWE	201	E	D	00	*	*
1 2 3	4 5 6	7	8	9 10	11	12

Note: *When ordering replacement parts or requesting service, be sure to refer to the specific model number, serial number, and DL number (if applicable) stamped on the unit nameplate.*

DIGITS 1 - 3: Product Type

TWE = Split System Heat Pump/Cooling Air Handler

DIGITS 4 - 6: Nominal Gross Cooling Capacity (MBh)

061 = 5 Tons (60 Hz)
090 = 7.5 Tons (60 Hz)
120 = 10 Tons (60 Hz)
150 = 12.5 Tons (60 Hz)
180 = 15 Tons (60 Hz)
240 = 20 Tons (60 Hz)
300 = 25 Tons (60 Hz)
051 = 4.6 Tons (50 Hz)
076 = 6.25 Tons (50 Hz)
101 = 8.33 Tons (50 Hz)
126 = 10.4 Tons (50 Hz)
156 = 13.0 Tons (50 Hz)
201 = 16.7 Tons (50 Hz)
251 = 20.9 Tons (50 Hz)

DIGIT 7: Major Development Sequence

D = Single Refrigeration Circuit
E = Dual Refrigeration Circuit

DIGIT 8: Electrical Characteristics

3 = 208–230/60/3
4 = 460/60/3
W = 575/60/3
D = 380-415/50/3
K = 380/60/3

DIGITS 9 - 10: Factory Installed Options

00 = Packed Stock (Standard)
03 = 2-Speed Variable Frequency Drive (VFD) standard motor (electromechanical condenser only)
04 = 2-Speed Variable Frequency Drive (VFD) oversized motor (electromechanical condenser only)
R3 = Single Zone Variable Air Volume (VFD) standard motor - (ReliaTel condenser only)
R4 = Single Zone Variable Air Volume (VFD) oversized motor - (ReliaTel condenser only)

DIGITS 11: Minor Design Sequence

* = Current Design Sequence[1]

DIGITS 12: Service Digit

* = Current Design Sequence[1]

1. ** = sequential alpha character*

General Information

This manual describes proper installation, operation, and maintenance procedures for air cooled systems. By carefully reviewing the information within this manual and following the instructions, the risk of improper operation and/or component damage will be minimized. It is important that periodic maintenance be performed to help assure trouble free operation. Should equipment failure occur, contact a qualified service organization with qualified, experienced HVAC technicians to properly diagnose and repair this equipment.

Important: *All phases of this installation must comply with the NATIONAL, STATE & LOCAL CODES. In addition to local codes, the installation must conform with National Electric Code -ANSI/NFPA NO. 70 LATEST REVISION.*

Any individual installing, maintaining, or servicing this equipment must be properly trained, licensed and qualified.

Important: *Do not remove the VFD without first contacting technical support! For performance-related questions and diagnostic support in North America call 1-877-872-6363. Any return requires a claim number FIRST. Removal of the VFD prior to this step will void the unit's warranties.*

Installation procedures should be performed in the sequence that they appear in this manual. Do not destroy or remove the manual from the unit. The manual should remain weather-protected with the unit until all installation procedures are complete.

Note: *It is not the intention of this manual to cover all possible variations in systems that may occur or to provide comprehensive information concerning every possible contingency that may be encountered during an installation. If additional information is required or if specific problems arise that are not fully discussed in this manual, contact your local sales office.*

Use the installation checklist provided In this manual to verify that all necessary installation procedures have been completed. Do not use the checklist as a substitute for reading the information contained in the manual. Read the entire manual before beginning installation procedures.

Unit Description

These air handler models incorporate a single slab coil assembly, improved application flexibility, servicing, maintenance accessibility and an improved accessory line. They are fully convertible, (vertical to horizontal discharge) without field removal of the coil assembly. They are shipped ready for horizontal installation.

All units have one drain pan that can be installed in any one of four positions. This allows for vertical or horizontal applications and right or left exit.

Important: *All dual circuit (digit 7 = E) have an intertwined coil, except for the 25 ton, TWE251 and TWE300 units.*

Pre-Installation

The final position for the air handler must be dictated by required service access to it, weight distribution over structural supports, and by the locations of electrical, refrigerant and condensate drainage connections. After this is determined, the following preparations should be made.

Unit Inspection

Inspect material carefully for any shipping damage. If damaged, it must be reported to, and claims made against the transportation company. Compare the information that appears on the unit nameplate with ordering and submittal data to ensure the proper unit was shipped. Available power supply must be compatible with electrical characteristics specified on component nameplates. Replace damaged parts with authorized parts only.

Inspection Checklist

To protect against loss due to damage incurred in transit, complete the following checklist upon receipt of the unit.

- ☐ Inspect individual pieces of the shipment before accepting the unit. Check for obvious damage to the unit or packing material.
- ☐ Inspect the unit for concealed damage before it is stored and as soon as possible after delivery. Concealed damage must be reported within 15 days. If concealed damage is discovered, stop unpacking the shipment. Do not remove damaged material from the receiving location. Take photos of the damage if possible. The owner must provide reasonable evidence that the damage did not occur after delivery.
- ☐ Notify the carrier's terminal of damage immediately by phone and by mail. Request an immediate joint inspection of the damage by the carrier and the consignee.
- ☐ Notify the sales representative and arrange for repair. Do not repair the unit until the damage is inspected by the carrier's representative.

Testing for Leaks

All TWE units are shipped with a holding charge of nitrogen in each circuit and should be leak tested before installation.

1. Remove the access panel.
2. Locate the liquid line or suction line access valve for each circuit.
3. Install gauges to determine if the circuits are still pressurized. If not, the charge has escaped and should be repaired as required to obtain a leak-free circuit.

Lifting Recommendations

⚠ WARNING

Improper Unit Lift!

Test lift unit approximately 24 inches to verify proper center of gravity lift point. To avoid dropping of unit, reposition lifting point if unit is not level.

NOTICE

Equipment Damage!

Use spreader bars to prevent straps from damaging the unit. Install the bars between lifting straps, both underneath the unit and above the unit to prevent the straps from crushing the unit cabinet or damaging the finish.

Before preparing the unit for lifting, estimate the approximate center of gravity for lifting safety. Because of placement of internal components, the unit weight may be unevenly distributed. See "Weights," p. 20 for approximate unit weights.

The crated unit can be moved using a forklift of suitable capacity. For lifting the unit into an elevated mounting position, run lifting straps or slings under the unit and attach securely to the lifting device.

Repositioning Drain Pan

Air handlers come with one drain pan that can be installed in any one of four positions; this allows for vertical or horizontal application and right or left condensate line connection.

Note: *Important! All air handlers are shipped with the drain pan installed in the horizontal position and the connection on the left side (as shown in Figure 1, p. 8. If an alternate position is required, the drain pan should be repositioned before setting the air handler.*

1. Remove the access plate at the opposite end of the drain connection. This plate secures and lifts the back end of the drain pan for sloping. It must be removed before the drain pan can be removed. This is done as follows:
   a. Remove the screw
   b. Lift the access plate up
   c. Pull the plate out. If the drain pan is to be moved to the vertical position also remove the other two access plates.
2. Remove the screw securing the drain pan.
   a. Lift the pan up
   b. Slide the pan out
3. Install the drain pan into the new position.

a. Slide the drain pan into the opening
b. Lift the drain pan up
c. Push it in all the way
d. Drop it down over the lip of the opening, secure with screw

4. Install the access plate on the opposite end of the drain pain.
   a. Slide the edge of the access plate under the drain pan
   b. Lift the access plate and drain pan up
   c. Push the access plate in
   d. Drop the access plate down over the lip of the opening, secure with screw

   Note: *If the drain pan is being moved to the vertical position, install the other access plates over the horizontal position opening*

Figure 1. Drain pan location

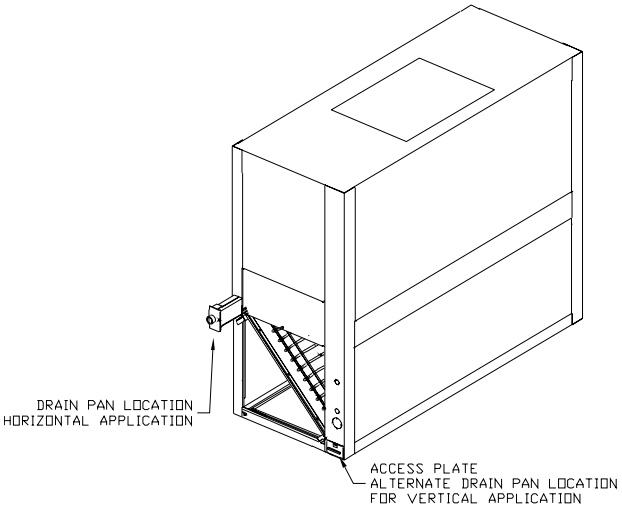

Figure 2. Drain pan relocation

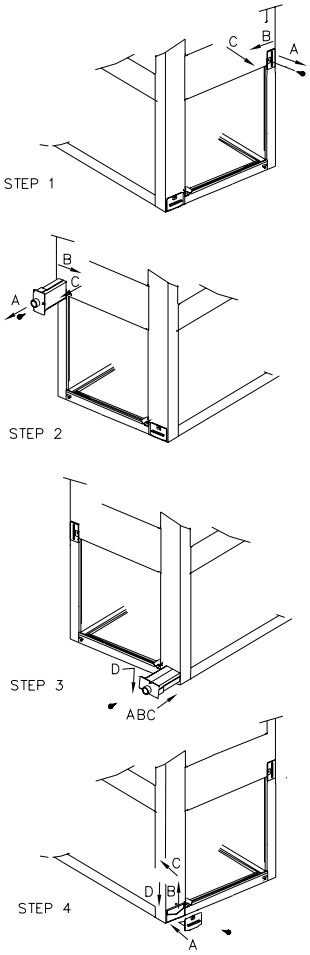

NOTICE

System Component Damage!

These air handlers are shipped with a dry nitrogen holding charge in the coil. Depress or remove the access valve cone to bleed off the nitrogen prior to brazing. Temporarily cap off tubes if the refrigerant line connections are to be made later.

Field Conversion to 460 Volt

⚠ WARNING

Hazardous Voltage w/Capacitors!

Disconnect all electric power, including remote disconnects and discharge all motor start/run capacitors before servicing. Follow proper lockout/tagout procedures to ensure the power cannot be inadvertently energized. For variable frequency drives or other energy storing components provided by Trane or others, refer to the appropriate manufacturer's literature for allowable waiting periods for discharge of capacitors. Verify with an appropriate voltmeter that all capacitors have discharged.

For additional information regarding the safe discharge of capacitors, see PROD-SVB06A-EN.

⚠ WARNING

Proper Field Wiring and Grounding Required!

All field wiring MUST be performed by qualified personnel. Improperly installed and grounded field wiring poses FIRE and ELECTROCUTION hazards. To avoid these hazards, you MUST follow requirements for field wiring installation and grounding as described in NEC and your local/state electrical codes.

- Available power supply must agree with electrical data on component nameplate.
- Some standard air handlers are shipped wired for 208-230 volt applications and can be converted for 460 volt by rewiring the blower motor. (This includes models TWE090D3, TWE090E3, TWE120D3, TWE120E3, TWE150E3 and TWE180E3).

Converting Motor to 460 Volt

1. Ensure power is disconnected to unit by following the warning above.
2. Remove unit access panels closest to motor.
3. Open terminal cover on lead end of motor.
4. Pull voltage selector plug from low voltage selection (see Figure 3, p. 9).
5. Shift the plug (or rotate 180°) to align plug for high voltage selection and re-insert plug.

   Important: *When re-inserting voltage selection plug, ensure it is fully seated.*
6. Replace terminal cover on lead end of motor.
7. Replace unit access panels.

Figure 3. Voltage change plug

VIEW OF TERMINAL END

To change voltage, pull plug, rotate 180° and reinsert

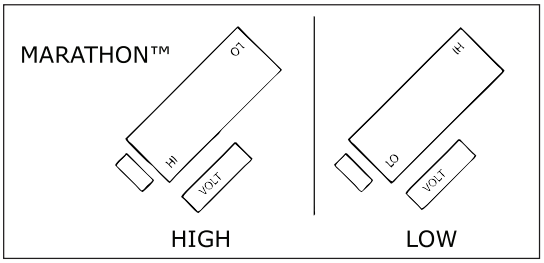

To change voltage, pull selector plug out, shift plug to align arrow to 460V for high voltage or 230V for low voltage as desired. Push plug back in.

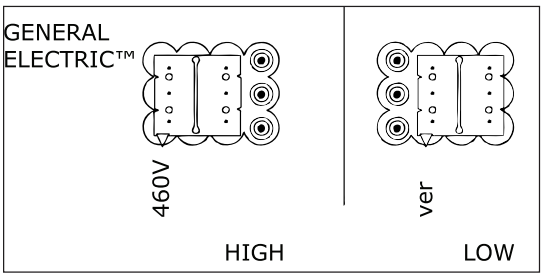

Connect lines to L1, L2, L3
To reverse rotation, interchange any two line connections

Refrigerant Piping

Reorienting Evaporator Coil (TWE126/150 and 156/180)

Important: *Applies to TWE126/150 and 156/180 when positioned for vertical upflow. Unit is shipped in the horizontal position. If installing in the* ***vertical position****, the coil* ***must be*** *reoriented by rotating the coil 4 degrees (control box side) from the shipped position.*

1. Remove screws from top evaporator coil bracket (bracket that attaches coil to cabinet and runs the length of the unit).
2. Rotate evaporator coil approximately 4 degrees clockwise - looking from the control box end. When the evaporator coil is rotated, the lower set of evaporator coil bracket holes will align with the support bracket (from which it was originally fastened).
3. Reinsert screws in evaporator coil bracket.

Figure 4. Evaporator coil reorientation for TWE126, 150, 156, 180

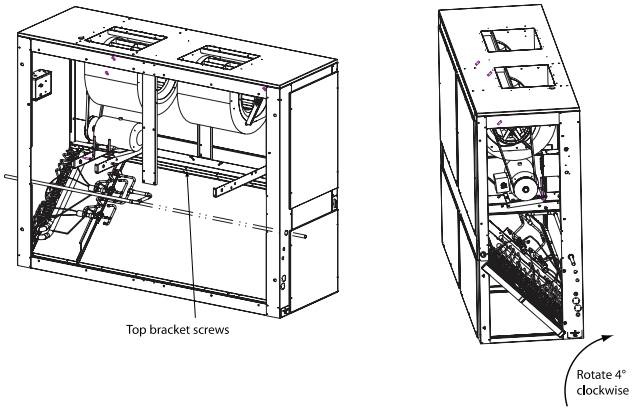

Preparation for Refrigerant Piping

NOTICE

Equipment Damage!

Do not apply heat to remove seal caps until the gauge port cores have been removed. If seal caps are intact, application of heat may generate excessive pressure in the unit and result in damage to the coil or expansion valve.

The air handler is designed so that refrigerant piping can enter from either the right or left hand side. It is shipped with the intent that the refrigerant lines will enter from the left hand side. To convert to right hand entry, unbraze the elbow on the suction line and rotate 180° and rebraze.

Important: *Access to refrigerant lines is limited in all horizontal and some vertical applications. Therefore, refrigerant lines should be stubbed out and temporarily capped prior to setting the air handler. Protect adjacent surfaces from heat damage when brazing in and around the air handler.*

Installations, Limitations and Recommendations

NOTICE

System Component Damage!

Properly insulate all refrigerant gas piping to prevent possible water damage due to condensation and to prevent capacity loss and possible compressor damage.

The general location of the air handler is normally selected by the architect, contractor and/or buyer. For proper installation, the following items must be considered:

- Available power supply must agree with electrical data on component nameplate.
- If external accessories are installed on the unit, additional clearances must be provided.
- All duct work should be properly insulated to prevent condensation and heat loss.
- Refrigerant gas piping must be insulated.

It is recommended that the outline drawings in the Dimensional Data section be studied and dimensions properly noted and checked against the selected installation site. By noting in advance which features are to be used, proper clearance allowances can be made for installation and possible future service.

Important: *When installing these units "free standing" with discharge grills and isolators, a top support with isolator should be added to prevent tipping. Support and isolator can be attached to a wall or other appropriate structure.*

If adding external accessories to the unit, additional clearances must be considered for the overall space needed.

For installation of accessories available for this air handler, follow the installation instructions that are shipped with each accessory.

Dimensional Data

Figure 5. Height, width and depth measurements

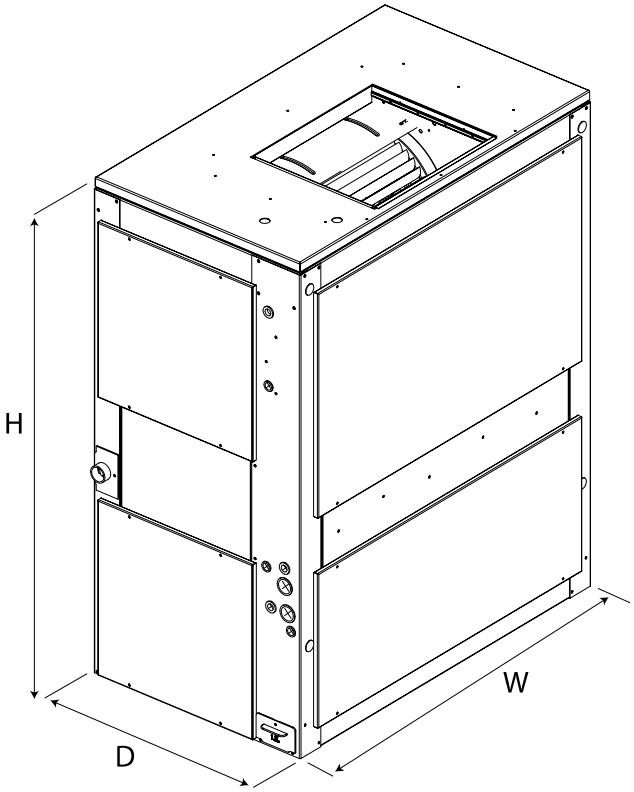

Model Number	H - in. (mm)	W - in. (mm)	D - in. (mm)
TWE051, 061	48-1/8 (1222.4)	39-5/8 (1006.5)	23-5/8 (600.0)
TWE076, 090	54-1/8 (1374.8)	49-1/8 (1247.8)	26-1/2 (673.1)
TWE101, 120	54-1/8 (1374.8)	65-1/8 (1654.2)	26-1/2 (673.1)
TWE126, 150, 156, 180	69-1/8 (1756.0)	81-1/4 (2063.7)	30 (762.0)
TWE201, 240, 251, 300	71-7/8 (1806.6)	94-1/4 (2394.0)	32-1/8 (816.0)

Note: Full dimensional data is available on the following pages.

Figure 6. 4.6, 5 ton air handler, single circuit

NOTES:
1. PANEL DEPTH 1/2" (12.7) (TYP. ALL PANELS).
2. REMOVABLE DRAIN PAN AND ATTACHED DRAIN CONNECTION MAY BE INSTALLED ON END OF UNIT IN EITHER THE VERTICAL OR HORIZONTAL CONFIGURATION, PLASTIC DRAIN PAN ACCESS PLATE ON THE END OF UNIT OPPOSITE DRAIN CONNECTION MUST BE REMOVED TO SLIDE DRAIN PAN OUT OF UNIT FOR CLEANING. ACCESS PLATE MUST BE RE-INSTALLED AFTER SLIDING DRAIN PAN BACK INTO UNIT.
3. IF PERIODIC DRAIN PAN CLEANING IS REQUIRED, ALLOW ROOM FOR PARTIAL REMOVAL OF DRAIN PAN CONNECTION AT END OF UNIT.
4. 1" (25.4) FEMALE SCHED. 40 (10.2) PVC PIPE DRAIN CONNECTION VERTICAL CONFIGURATION.
5. 1" (25.4) FEMALE SCHED. 40 (10.2) PVC PIPE DRAIN CONNECTION HORIZONTAL CONFIGURATION.

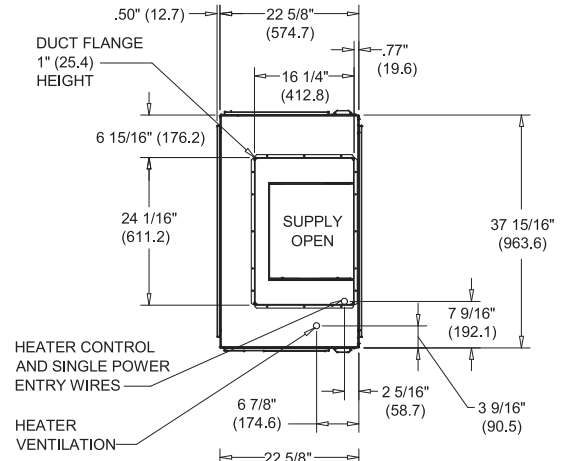

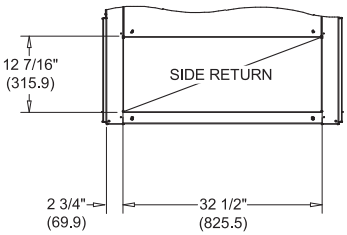

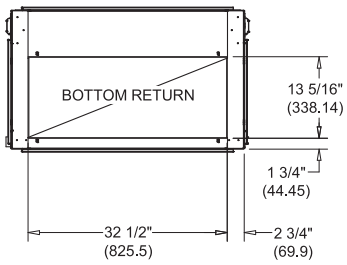

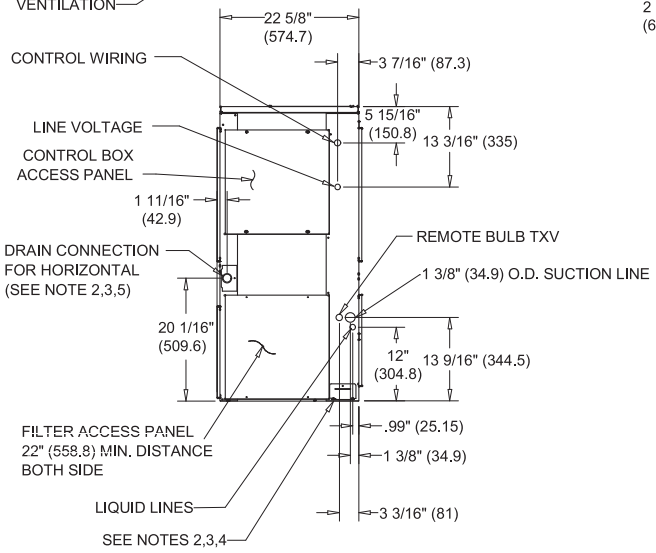

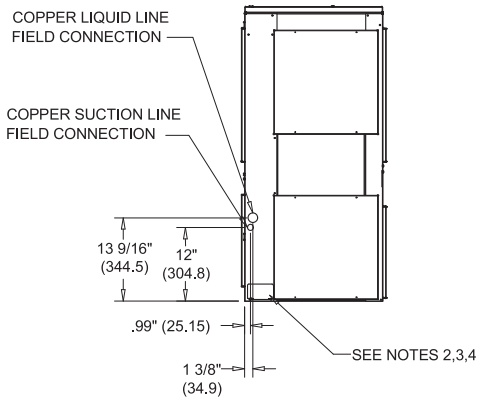

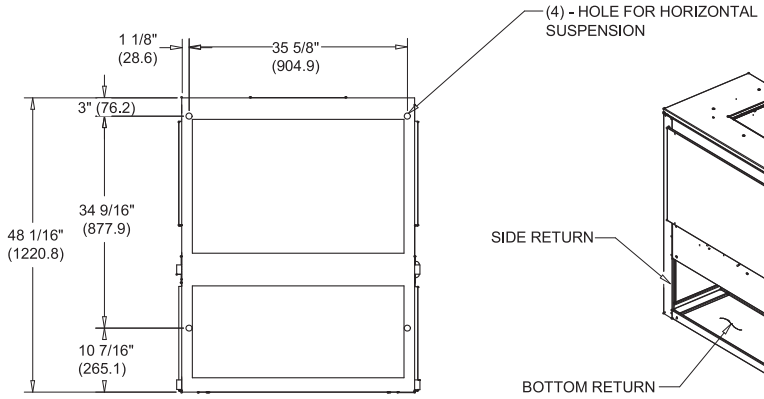

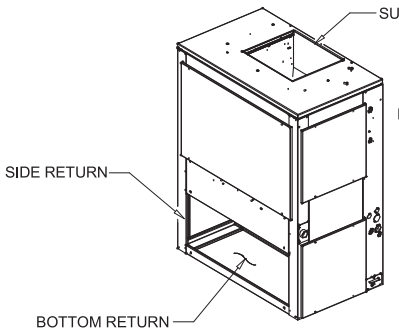

SUPPLY VERTICAL - RETURN HORIZONTAL / RETURN VERTICAL

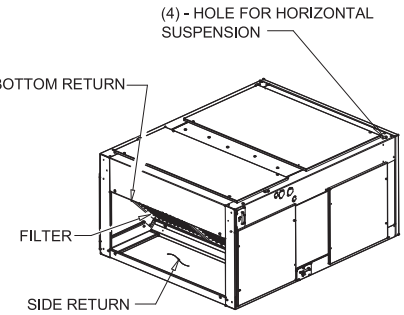

SUPPLY HORIZONTAL - RETURN VERTICAL / RETURN HORIZONTAL

Figure 7. 5 ton air handler, dual circuit

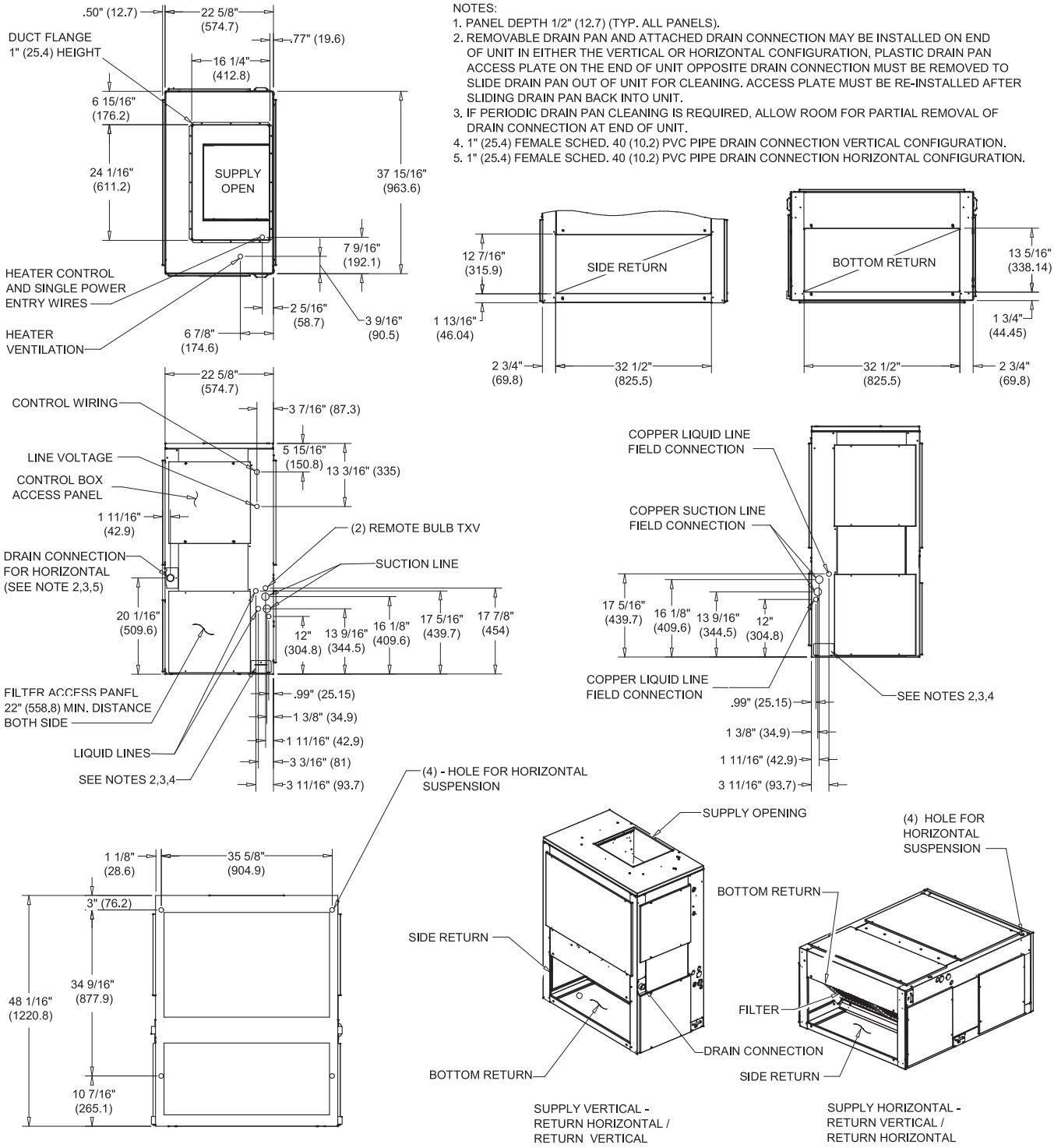

Figure 8. 6.25, 7.5 ton air handler, single circuit

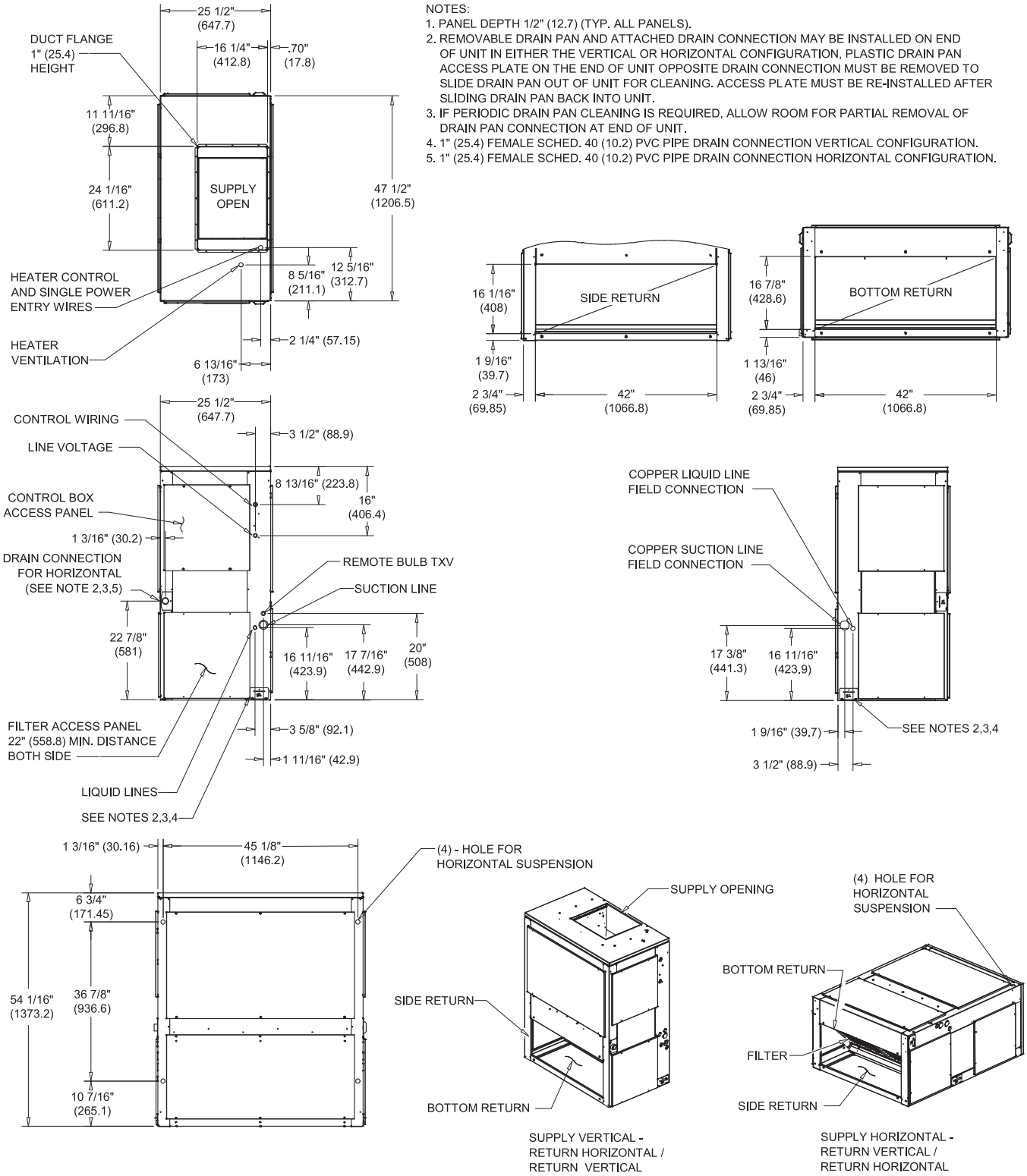

Figure 9. 6.25, 7.5 ton air handler, dual circuit

NOTES:
1. PANEL DEPTH 1/2" (12.7) (TYP. ALL PANELS).
2. REMOVABLE DRAIN PAN AND ATTACHED DRAIN CONNECTION MAY BE INSTALLED ON END OF UNIT IN EITHER THE VERTICAL OR HORIZONTAL CONFIGURATION, PLASTIC DRAIN PAN ACCESS PLATE ON THE END OF UNIT OPPOSITE DRAIN CONNECTION MUST BE REMOVED TO SLIDE DRAIN PAN OUT OF UNIT FOR CLEANING. ACCESS PLATE MUST BE RE-INSTALLED AFTER SLIDING DRAIN PAN BACK INTO UNIT.
3. IF PERIODIC DRAIN PAN CLEANING IS REQUIRED, ALLOW ROOM FOR PARTIAL REMOVAL OF DRAIN PAN CONNECTION AT END OF UNIT.
4. 1" (25.4) FEMALE SCHED. 40 (10.2) PVC PIPE DRAIN CONNECTION VERTICAL CONFIGURATION.
5. 1" (25.4) FEMALE SCHED. 40 (10.2) PVC PIPE DRAIN CONNECTION HORIZONTAL CONFIGURATION.

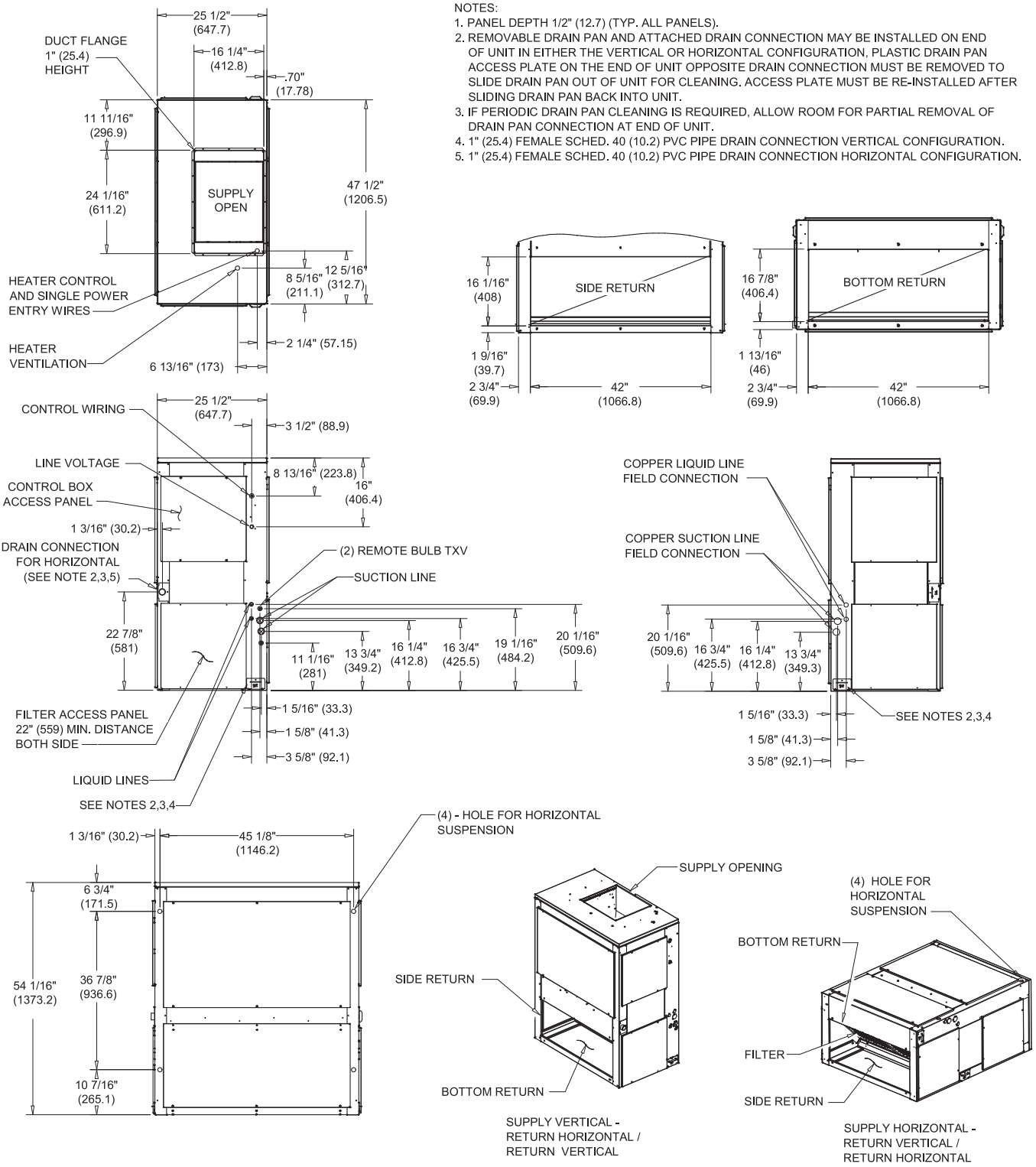

Figure 10. 8.33, 10 ton air handler, single circuit

NOTES:
1. PANEL DEPTH 1/2" (12.7) (TYP. ALL PANELS).
2. REMOVABLE DRAIN PAN AND ATTACHED DRAIN CONNECTION MAY BE INSTALLED ON END OF UNIT IN EITHER THE VERTICAL OR HORIZONTAL CONFIGURATION, PLASTIC DRAIN PAN ACCESS PLATE ON THE END OF UNIT OPPOSITE DRAIN CONNECTION MUST BE REMOVED TO SLIDE DRAIN PAN OUT OF UNIT FOR CLEANING. ACCESS PLATE MUST BE RE-INSTALLED AFTER SLIDING DRAIN PAN BACK INTO UNIT.
3. IF PERIODIC DRAIN PAN CLEANING IS REQUIRED, ALLOW ROOM FOR PARTIAL REMOVAL OF DRAIN PAN CONNECTION AT END OF UNIT.
4. 1" (25.4) FEMALE SCHED. 40 (10.2) PVC PIPE DRAIN CONNECTION VERTICAL CONFIGURATION.
5. 1" (25.4) FEMALE SCHED. 40 (10.2) PVC PIPE DRAIN CONNECTION HORIZONTAL CONFIGURATION.

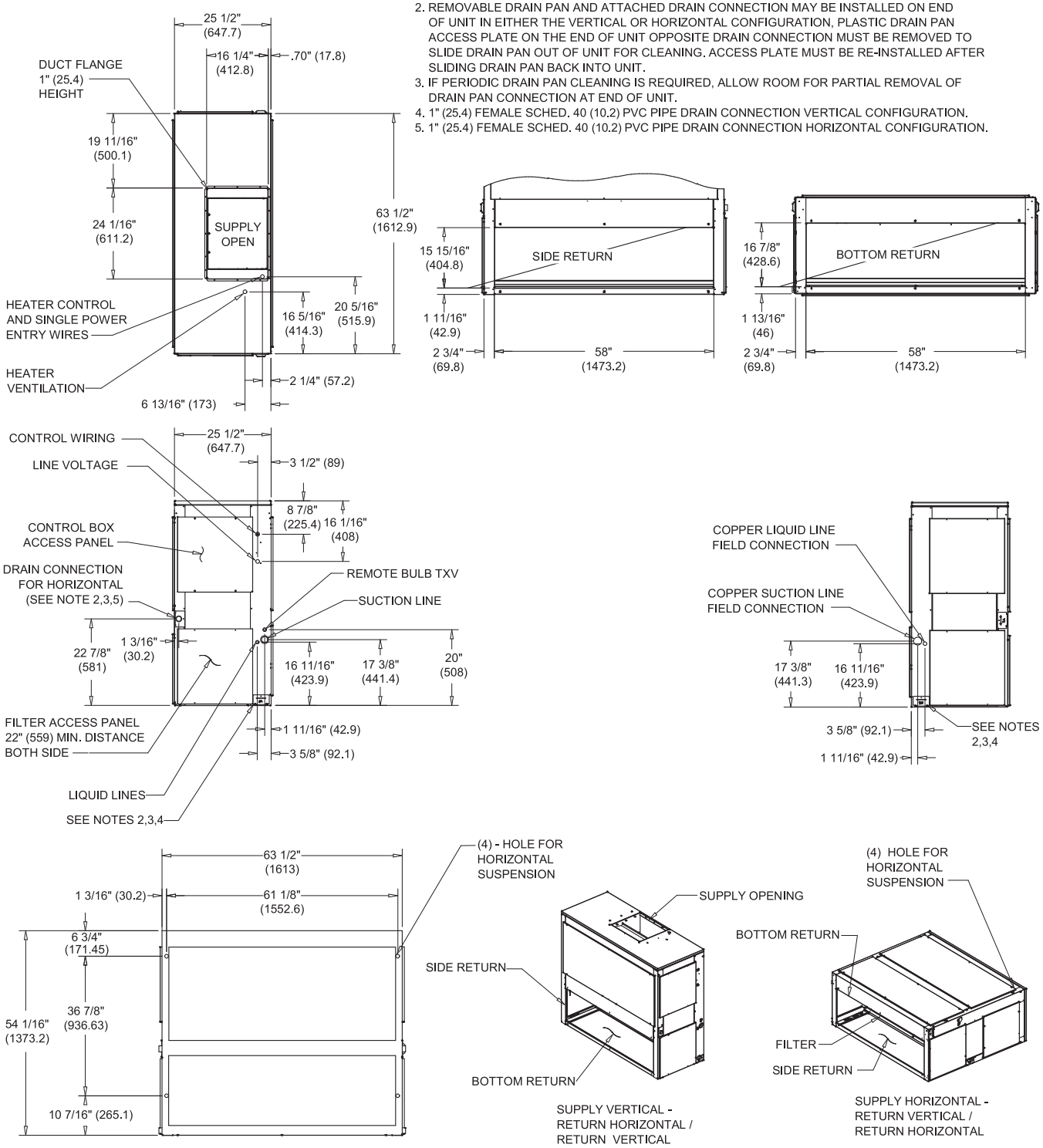

Figure 11. 8.33, 10 ton air handler, dual circuit

NOTES:
1. PANEL DEPTH 1/2" (12.7) (TYP. ALL PANELS).
2. REMOVABLE DRAIN PAN AND ATTACHED DRAIN CONNECTION MAY BE INSTALLED ON END OF UNIT IN EITHER THE VERTICAL OR HORIZONTAL CONFIGURATION, PLASTIC DRAIN PAN ACCESS PLATE ON THE END OF UNIT OPPOSITE DRAIN CONNECTION MUST BE REMOVED TO SLIDE DRAIN PAN OUT OF UNIT FOR CLEANING. ACCESS PLATE MUST BE RE-INSTALLED AFTER SLIDING DRAIN PAN BACK INTO UNIT.
3. IF PERIODIC DRAIN PAN CLEANING IS REQUIRED, ALLOW ROOM FOR PARTIAL REMOVAL OF DRAIN PAN CONNECTION AT END OF UNIT.
4. 1" (25.4) FEMALE SCHED. 40 (10.2) PVC PIPE DRAIN CONNECTION VERTICAL CONFIGURATION.
5. 1" (25.4) FEMALE SCHED. 40 (10.2) PVC PIPE DRAIN CONNECTION HORIZONTAL CONFIGURATION.

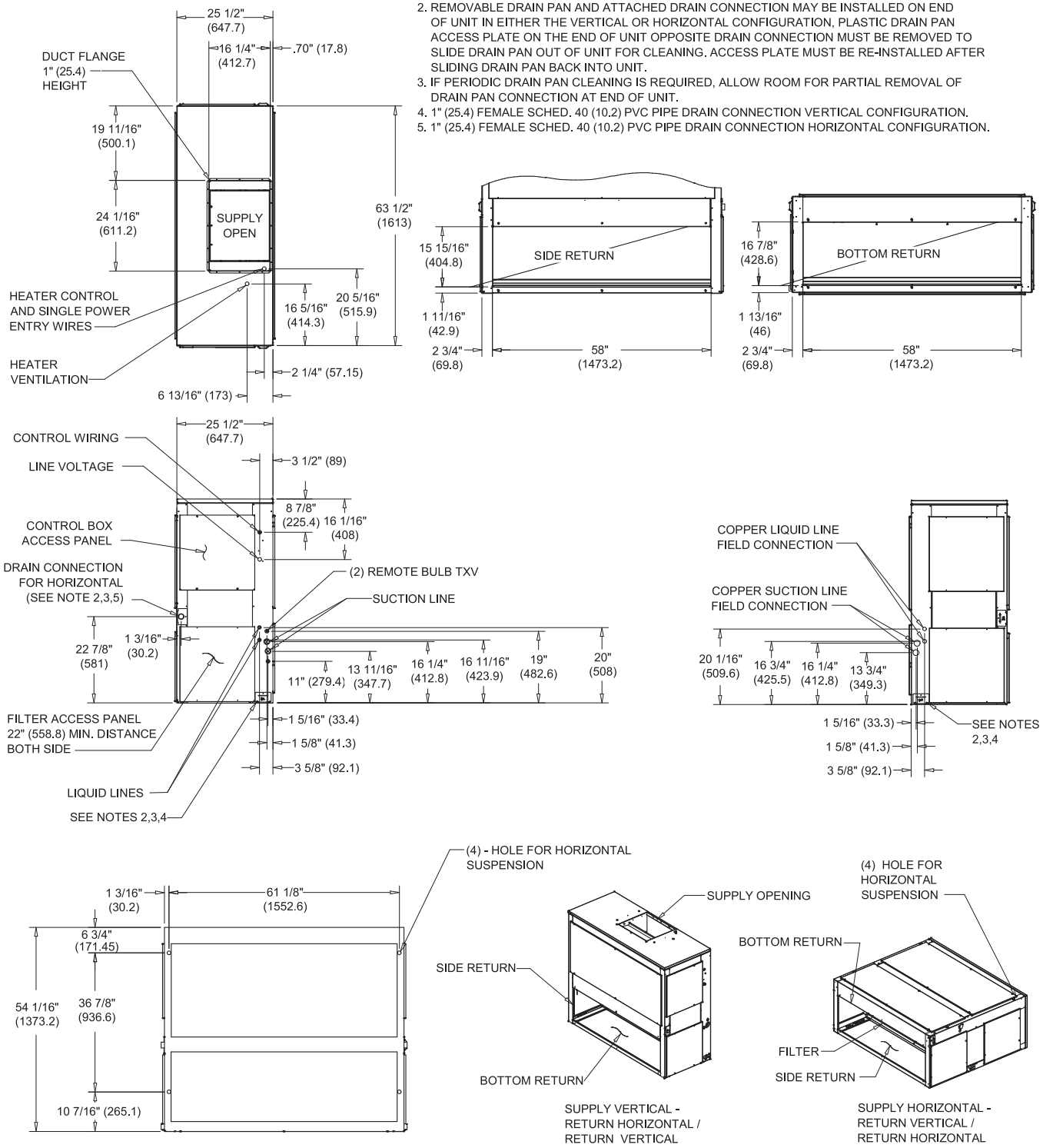

Figure 12. 10.4, 13, 12.5, 15 ton air handler, dual circuit

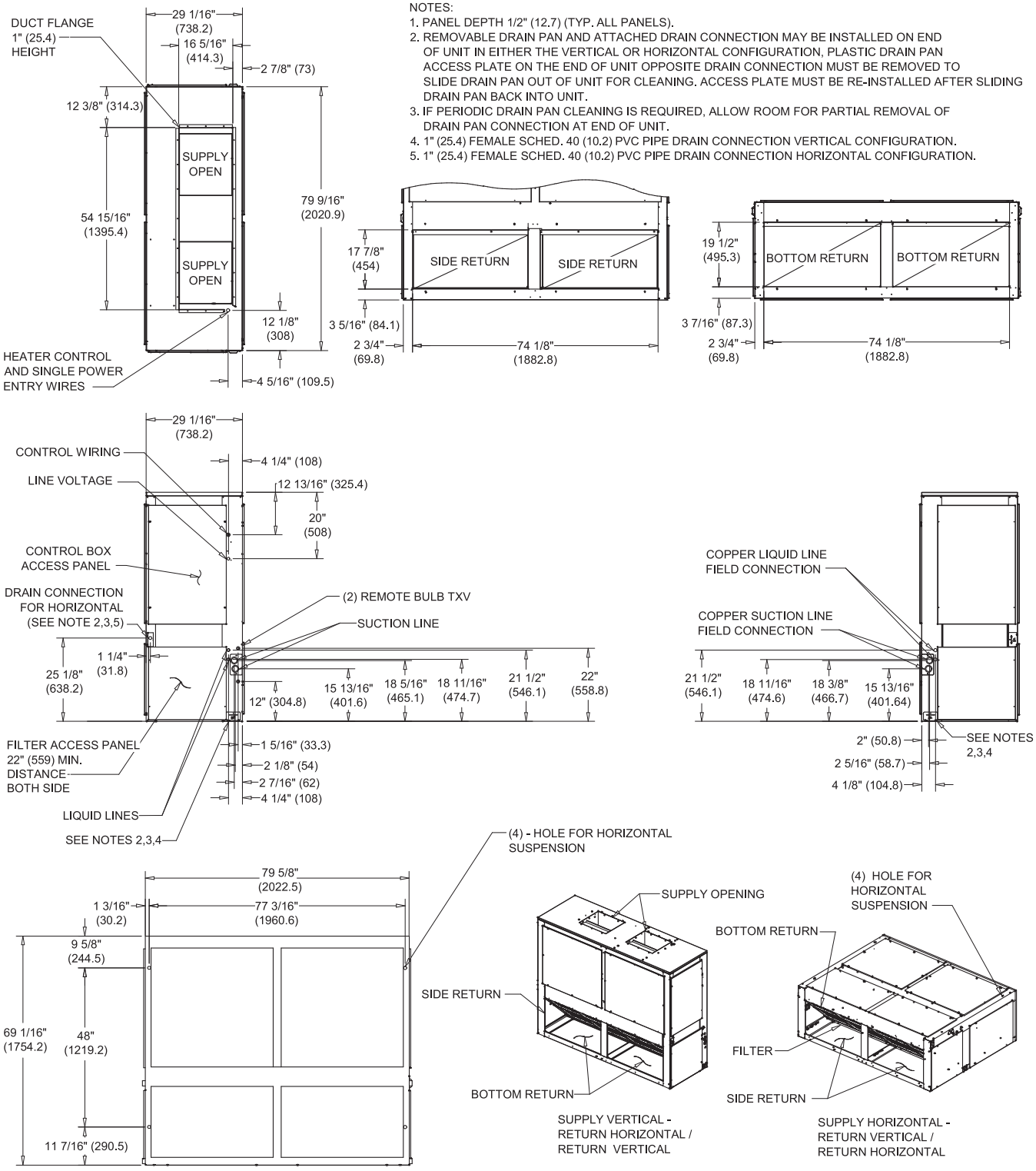

Figure 13. 16.7, 20.9, 20, 25 ton air handler, dual circuit

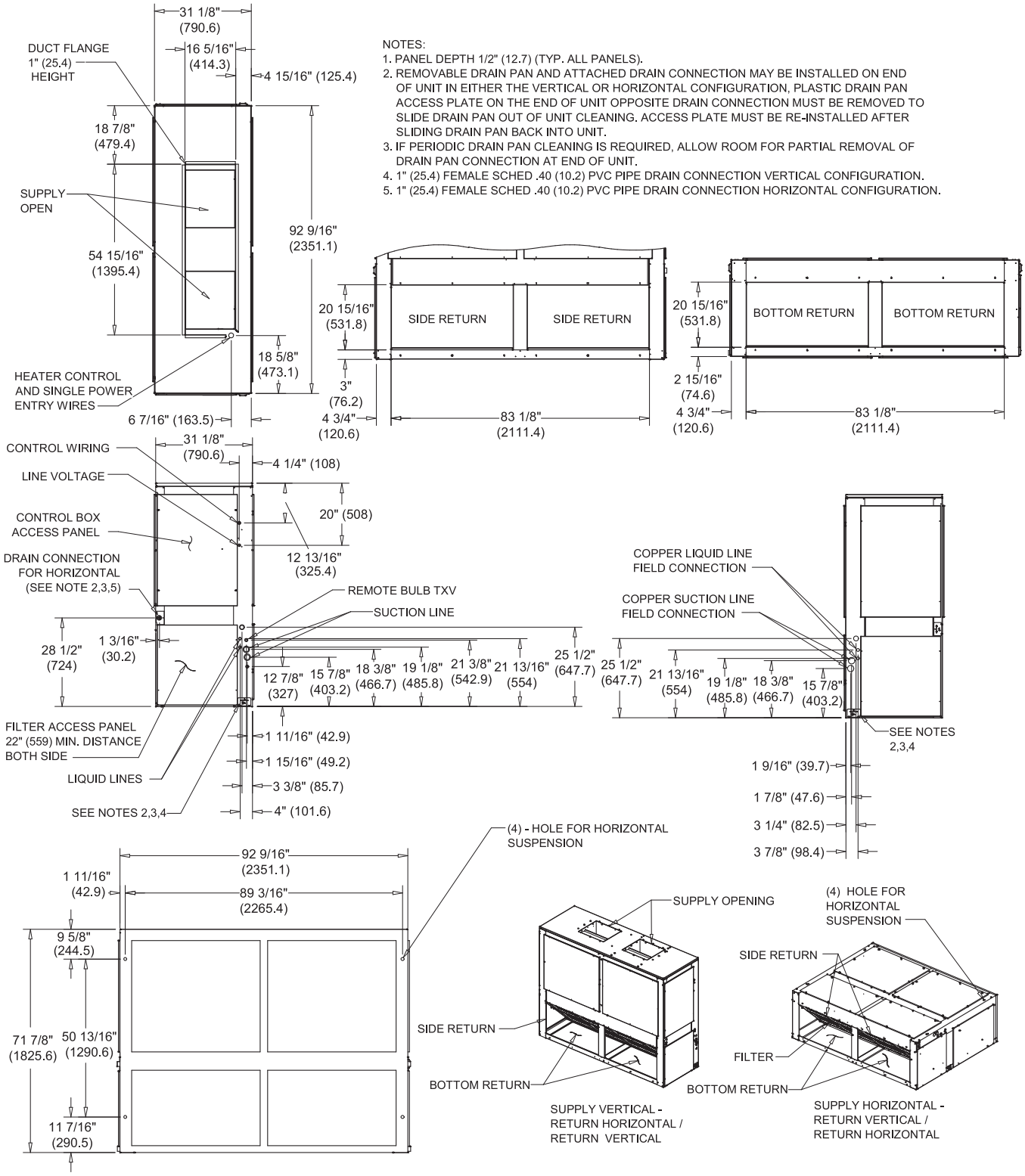

Weights

Air Handler

Table 1. Standard air handler (TWE) — unit and corner weights - (60 Hz)

Tons	Model Number	Shipping Max (lbs)	Net Max (lbs)	Corner Weights - Vertical				Corner Weights - Horizontal			
				1	2	3	4	1	2	3	4
5	TWE061D/E	263	232	55	71	51	55	54	67	50	61
7.5	TWE090D/E	360	323	67	99	75	82	56	92	87	88
10	TWE120D/E	429	393	77	121	110	85	79	118	77	119
12.5	TWE150E	730	676	168	192	181	135	196	164	145	171
15	TWE180E	729	675	167	192	181	135	196	163	145	171
20	TWE240E	891	818	258	168	161	231	256	181	146	235
25	TWE300E	972	899	211	229	184	275	272	176	228	223

Table 2. SZVAV and 2-Speed VFD air handler (TWE) — unit and corner weights - (60 Hz)

Tons	Model Number	Shipping Max (lbs)	Net Max (lbs)	Corner Weights - Vertical				Corner Weights - Horizontal			
				1	2	3	4	1	2	3	4
7.5	TWE090E	360	323	67	99	75	82	56	92	87	88
10	TWE120D/E	429	393	77	121	110	85	79	118	77	119
12.5	TWE150E	730	676	168	192	181	135	196	164	145	171
15	TWE180E	729	675	167	192	181	135	196	163	145	171
20	TWE240E	891	818	258	168	161	231	256	181	146	235
25	TWE300E	972	899	211	229	184	275	272	176	228	223

Table 3. Standard air handler (TWE) — unit and corner weights - (50 Hz)

Tons	Model Number	Shipping Max (lbs)	Net Max (lbs)	Corner Weights - Vertical				Corner Weights - Horizontal			
				1	2	3	4	1	2	3	4
4.6	TWE051D	263	232	55	71	51	55	54	67	50	61
6.25	TWE076D/E	360	323	67	99	75	82	56	92	87	88
8.33	TWE101D/E	429	393	77	121	110	85	79	118	77	119
10.4	TWE126E	730	676	168	192	181	135	196	164	145	171
13	TWE156E	729	675	167	192	181	135	196	163	145	171
16.7	TWE201E	891	818	258	168	161	231	256	181	146	235
20.9	TWE251E	972	899	211	229	184	275	272	176	228	223

Figure 14. Vertical — TWE051, 076, 101, 061, 090, 120

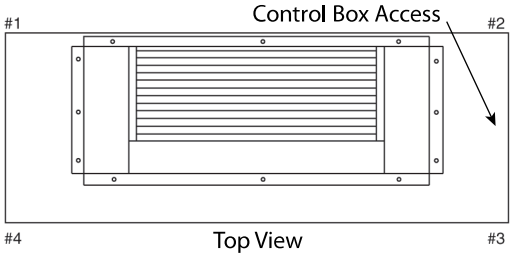

Figure 15. Vertical — TWE126, 156, 201, 251, 150, 180, 240, 300

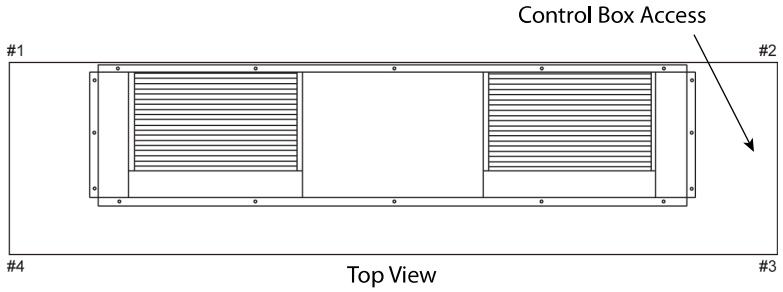

Figure 16. Horizontal — TWE051, 076, 101, 061, 090, 120

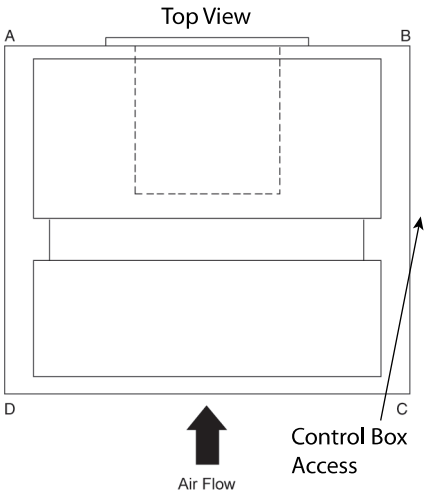

Figure 17. Horizontal — TWE126, 156, 201, 251, 150, 180, 240, 300

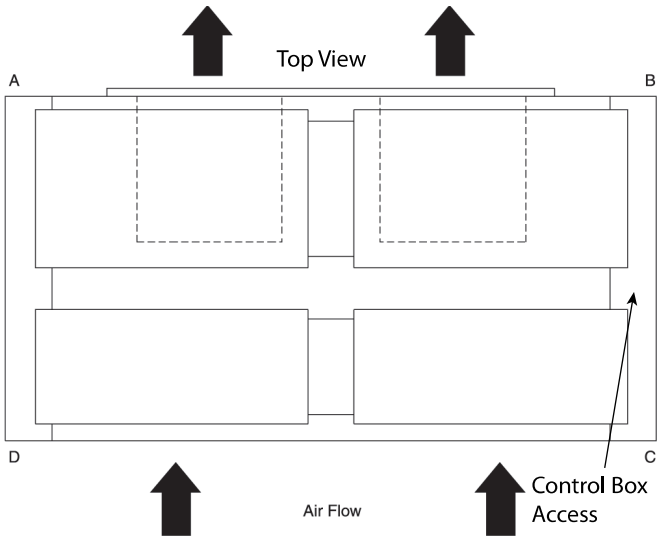

Installation

Horizontal Suspension

If the air handler will be suspended, use a suspension mounting kit to isolate the unit from the structure. This is usually accomplished with spring or rubber isolators, which are offered as an accessory.

Mounting rods must be field supplied. Isolator selection is dependent upon total unit weight including accessories — see "Weights," p. 20 for approximate unit weights.

NOTICE

Equipment Damage!

Before hanging the unit on suspension rods, reinforce the cabinet around the suspension holes by using a large washer inside the cabinet. Washers should be between the skin of the air handler and the nut on the suspension rod.

Align holes in the cabinet with structural supports and secure suspension rods to the structure, then to the air handler cabinet. If hole locations do not permit proper alignment with existing structure, it may be necessary to field fabricate cross members on existing structural beams.

Note: *When other than bottom return is to be used, side panel removal for return duct installation must be secured over the bottom opening.*

Leveling

This air handler has a double sloped drain pan. In order to assure proper drainage along the length of the drain pan, it is important to have the unit properly leveled. Be sure the air handler is level.

Auxiliary Drain Pan

A field fabricated, auxiliary drain pan should be installed under the unit for all horizontal applications and when air handlers are installed above ceilings or in other locations where condensate overflow may cause damage.

This drain pan will eliminate any excess condensation that may be due to extreme humidity or an obstructed drain in the primary drain pan. Drain lines from this pan must be installed, but should not be connected to the primary drain line from the unit. Isolate the auxiliary drain pan from both the air handler and the structure.

Refrigerant Piping

Installation, brazing, leak testing and evacuation of refrigerant lines are covered in the installation instructions that shipped with the outdoor unit. Read the instructions before beginning installation of refrigerant lines.

NOTICE

Equipment Damage!

Ensure that the refrigerant lines passing through the cabinet are not resting on sharp sheet metal edges and that the bulb(s) are attached to the suction line of the same circuit.

1. Locate cloth bag(s) attached to the refrigerant tube of the coil that contains a stainless steel clamp and insulation material (approximately 9" long by 4" wide) for each refrigerant circuit. This is for attaching and insulating the expansion valve bulb(s) to the suction line(s).
2. Attach the expansion valve bulb(s)

   on air handlers that will have refrigerant lines entering the cabinet from the left side:

   a. Remove the split rubber grommet from the knockout in the end of the air handler. Uncoil the cap tube with the bulb attached at the expansion valve and place the grommet on the cap tube.

   b. With the grommet around the tube, push the bulb through the hole and position the grommet back into its original position (one bulb and cap tube on single circuit units, and two bulbs and cap tubes on dual circuit units).

   on air handlers that will have refrigerant lines entering the cabinet from the right side:

   a. Attach the bulb(s) to the suction tube(s) inside the cabinet, approximately 10" from the right end of the unit.
3. Attach the bulb(s) on a horizontal section of tube where the entire length of the bulb is in contact with the tube (see Figure 18, p. 23), approximately 45 degrees off vertical (a 10 or 2 o'clock position).
4. After attaching to the suction line(s), either inside or outside of the cabinet, wrap the insulation around the bulb(s) and suction tube(s).

Note: *Suction piping should be insulated.*

⚠ WARNING

Fiberglass Wool!

You MUST wear all necessary Personal Protective Equipment (PPE) including gloves, eye protection, a NIOSH approved dust/mist respirator, long sleeves and pants when working with products containing fiberglass wool.

Precautionary Measures:

- **Avoid breathing fiberglass dust.**
- **Use a NIOSH approved dust/mist respirator.**
- **Avoid contact with the skin or eyes. Wear long-sleeved, loose-fitting clothing, gloves, and eye protection.**
- **Wash clothes separately from other clothing; rinse washer thoroughly.**
- **Operations such as sawing, blowing, tear-out, and spraying may generate fiber concentrations requiring additional respiratory protection. Use the appropriate NIOSH approved respirator.**

First Aid Measures:

- **Eye Contact - Flush eyes with water to remove dust. If symptoms persist, seek medical attention.**
- **Skin Contact - Wash affected areas gently with soap and warm water after handling.**

Figure 18. Remote bulb installation

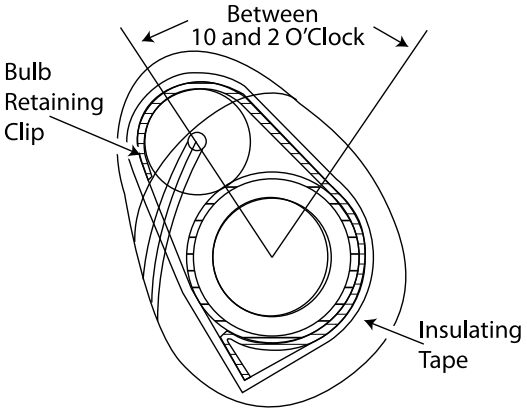

Condensate Piping

The drain pan condensate connection is a female slip joint type for 1″ Schedule 40 PVC pipe. Use PVC cement and tubing as required (field supplied) to construct a trap. A union or flexible tubing and clamps may be installed if the drain pan is to be removed periodically for cleaning.

Note: *When air handler is installed in the vertical position and close proximity trapping of condensate is required, use of a subbase accessory to raise the air handler for clearance of the drain trap is recommended. See Figure 19, p. 23 for a typical drain trap assembly.*

Figure 19. Typical drain trap assembly

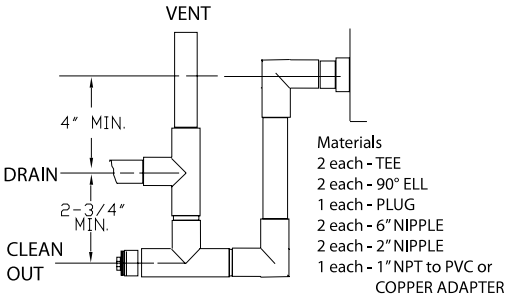

Filter Replacement

⚠ WARNING

Fiberglass Wool!

You MUST wear all necessary Personal Protective Equipment (PPE) including gloves, eye protection, a NIOSH approved dust/mist respirator, long sleeves and pants when working with products containing fiberglass wool.

Precautionary Measures:

- **Avoid breathing fiberglass dust.**
- **Use a NIOSH approved dust/mist respirator.**
- **Avoid contact with the skin or eyes. Wear long-sleeved, loose-fitting clothing, gloves, and eye protection.**
- **Wash clothes separately from other clothing; rinse washer thoroughly.**
- **Operations such as sawing, blowing, tear-out, and spraying may generate fiber concentrations requiring additional respiratory protection. Use the appropriate NIOSH approved respirator.**

First Aid Measures:

- **Eye Contact - Flush eyes with water to remove dust. If symptoms persist, seek medical attention.**
- **Skin Contact - Wash affected areas gently with soap and warm water after handling.**

Air handlers are shipped with throwaway filters installed. For replacement filters consult the air handler service facts for correct size and number.

To replace filters from the end of the unit, remove lower access panel (either end) and slide old filters out and replace with new ones.

To replace from the front of the unit, remove one "L" shaped angle. Remove and replace filters and reinstall "L" shaped angle. See Figure 20, p. 24.

To convert from 1" filter to a 2" filter on units so equipped, remove lower access panels from both ends of the air handler. Remove screws and rotate the "L" shaped angles from both the top and bottom of the filter track 180° to increase the width of the filter opening.

Figure 20. Filter location

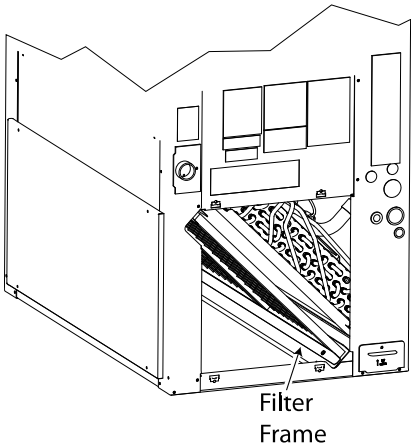

Duct Connections

The supply and return ducts should be connected to the unit with flame retardant duct connectors to reduce vibration transmission. The return duct should be sized to the same dimensions as the return inlet of the unit.

Important: *Duct flanges are provided for attachment of the duct work and are packaged on the outside of the cabinet for TWE150, 180, 240, 300 and TWE126, 156, 201, 251. The duct flanges are fastened to the pallet below the coil (bottom return) on the TWE051, 061, 076, 090, 101 and 120 models.*

Air Flow Settings

Standard Units

Unit is shipped for nominal airflow with nominal static pressure. Please refer to the fan performance table in either the product catalog or unit service facts and select the proper drive package for each application. Failure to do so could result in improper airflow causing coil frosting or condensate management problems. Condensate management problems such as water blow off could be the result of too great of air face velocity across the coil. To ensure proper operation refer to "Fan Belt Adjustment," p. 44.

SZVAV Units

For SZVAV units, air flow is set by using potentiometer R-136 on the ReliaTel options module found in the air handler control box, see Figure 21, p. 24. The potentiometer will adjust the maximum air flow between the range of 60 Hz to 44.50 Hz. If the desired maximum operating point from the catalog fan table is lower than 44.50 Hz, parameter 6-15 on the VFD must be reprogrammed to 50 Hz. The VFD is preset from the factory to a default of 25 Hz for the lower limit and does not need to be reprogrammed.

Figure 21. ReliaTel options module

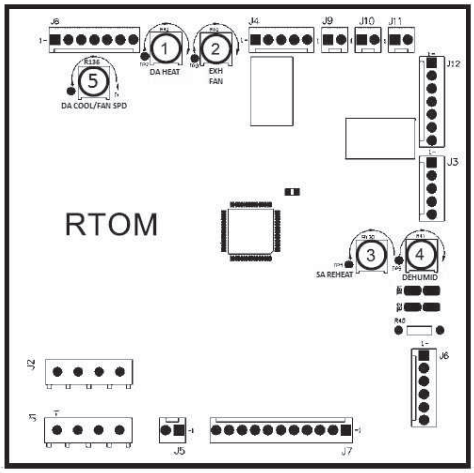

Measure the voltage between TP1 on the RTOM and ground. Use Table 4, p. 24 to set the desired maximum operating supply fan speed.

Table 4. SZVAV air handler speed to voltage

Parameter 6-15 Set to 60 Hz			
High Speed (Hz)	**TP1 (RTOM) Voltage (Vdc)**	**High Speed (Hz)**	**TP1 (RTOM) Voltage (Vdc)**
38.00	<0.10	44.00	1.65
38.40	0.20	44.40	1.70
38.80	0.30	44.80	1.75
39.20	0.45	45.20	1.83
39.60	0.55	45.60	1.90
40.00	0.70	46.00	1.95
40.40	0.80	46.40	2.00
40.80	0.95	46.80	2.05
41.20	1.05	47.20	2.10
41.60	1.15	47.60	2.13
42.00	1.25	48.00	2.17
42.40	1.30	48.40	2.21

Table 4. SZVAV air handler speed to voltage (continued)

Parameter 6-15 Set to 60 Hz			
High Speed (Hz)	**TP1 (RTOM) Voltage (Vdc)**	**High Speed (Hz)**	**TP1 (RTOM) Voltage (Vdc)**
42.80	1.35	48.80	2.27
43.20	1.45	49.20	2.30
43.60	1.55	49.60	2.35
—	—	50.00	>2.40
44.50	<0.10	52.25	1.65
45.02	0.20	52.77	1.70
45.53	0.30	53.28	1.75
46.05	0.45	53.80	1.83
46.57	0.55	54.32	1.90
47.08	0.70	54.83	1.95
47.60	0.80	55.35	2.00
48.12	0.95	55.87	2.05
48.63	1.05	56.38	2.10
49.15	1.15	56.90	2.13
49.67	1.25	57.42	2.17
50.18	1.30	57.93	2.21
50.70	1.35	58.45	2.27
51.22	1.45	58.97	2.30
51.73	1.55	59.48	2.35
—	—	60.00	>2.40

2-Speed VFD Units

To configure units with an RTOM for 2-speed operation move plug PPM 10 from PPF 10 to TP. Refer to "Heating and Cooling Setpoint Arbitration," p. 27 for setpoint connection. Complete the configuration by reprogramming VFD parameter 6-10 to 5.00 V and parameter 6-11 to 7.60 V. For 2-Speed VFD controlled units the desired maximum air flow (High Speed) is set by reprogramming parameter 6-15 on the VFD to the frequency value that best meets the RPM requirement as shown in the catalog fan tables.

The minimum air flow (Low Speed) is set by reprogramming parameter 6-14 on the VFD. Refer to Table 5, p. 25 to see the allowed Low Speed range for a given High Speed. Use the Menu button and up and down arrows on the keypad to access the parameters.

Table 5. 2-Speed VFD programming speeds

High Speed (Hz)	Low Speed (Hz) Ranges	High Speed (Hz)	Low Speed (Hz) Ranges
60.00	25.00 - 39.60	48.00	25 - 31.68
59.00	25.00 - 38.94	47.00	25 - 31.02
58.00	25.00 - 38.28	46.00	25 - 30.36
57.00	25.00 - 37.62	45.00	25 - 29.70
56.00	25.00 - 36.96	44.00	25 - 29.04
55.00	25.00 - 36.30	43.00	25 - 28.38
54.00	25.00 - 35.64	42.00	25 - 27.72
53.00	25.00 - 34.98	41.00	25 - 27.06
52.00	25.00 - 34.32	40.00	25 - 26.40
51.00	25.00 - 33.66	39.00	25 - 25.74
50.00	25.00 - 33.00	38.00	25 - 25.08
49.00	25.00 - 32.34	—	—

Minimum Supply Fan Output

Refer to Table 6, p. 25 for details on minimum supply fan output signals associated with each unit function. Note that each value represents the actual Fan Output % based on 100% being the customers selected maximum operating speed.

Table 6. Minimum supply fan speeds for SZVAV units

VFD Parameter 6-15 Set to 60 Hz	
Function	**Minimum Fan Output %**
Ventilation Only	58%
Cool 1 (C1 or C2)	58%
Cool 2 (C1 + C2 Energized)	80%
CV Staged Heat	100%

VFD Parameter 6-15 Set to 50 Hz	
Function	**Minimum Fan Output %**
Ventilation Only	64%
Cool 1 (C1 or C2)	64%
Cool 2 (C1 + C2 Energized)	83%
CV Staged Heat	100%

Table 7. Minimum supply fan speeds for 2-Speed units

Function	Fan Output %
Ventilation Only	42 - 66% [a]
Cool 1 (C1)	42 - 66% [a]

Table 7. Minimum supply fan speeds for 2-Speed units (continued)

Function	Fan Output %
Cool 2 (C1 + C2 Energized)	100%
CV Staged Heat	100%

(a) Fan Output percentage is based on the customer chosen upper and lower speed settings.

Important: *Do not remove the VFD without first contacting technical support! For performance-related questions and diagnostic support in North America call 1-877-872-6363. Any return requires a claim number FIRST. Removal of the VFD prior to this step will void the unit warranty.*

Electrical Connections

⚠ WARNING

Hazardous Voltage w/Capacitors!

Disconnect all electric power, including remote disconnects and discharge all motor start/run capacitors before servicing. Follow proper lockout/tagout procedures to ensure the power cannot be inadvertently energized. For variable frequency drives or other energy storing components provided by Trane or others, refer to the appropriate manufacturer's literature for allowable waiting periods for discharge of capacitors. Verify with an appropriate voltmeter that all capacitors have discharged.

For additional information regarding the safe discharge of capacitors, see PROD-SVB06A-EN.

⚠ WARNING

Proper Field Wiring and Grounding Required!

All field wiring MUST be performed by qualified personnel. Improperly installed and grounded field wiring poses FIRE and ELECTROCUTION hazards. To avoid these hazards, you MUST follow requirements for field wiring installation and grounding as described in NEC and your local/state electrical codes.

1. All electrical lines, sizing, protection, and grounding must be in accordance with the National Electric Code and local codes.
2. Isolate conduit whenever vibration transmission may cause a noise problem within the building structure.
3. Ensure all connections are tight and no wires exposed.
4. All accessories must be installed and wired according to the instructions packaged with that accessory.

   For air handler power entry only, or for dual power entry (power entry for air handler and power entry for electric heats), the electrical connections are made in the fan control box located in the right side of the air handler and electric heater respectively. Wiring entrance is through holes provided in the end of the air handler cabinet, Figure 22, p. 26. Breaker or fuse size can be selected using the nameplates attached to the unit and electric heater.

Figure 22. Electrical entries

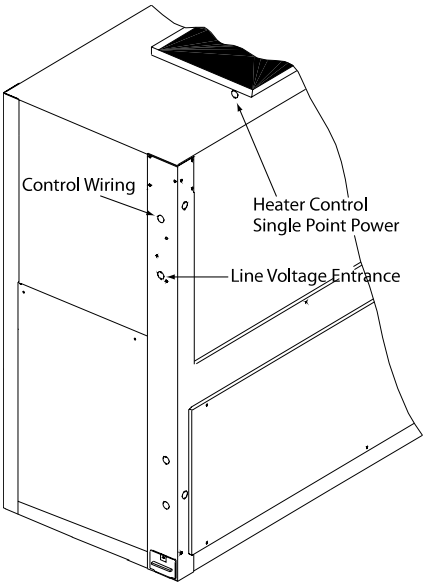

Table 8. Recommended thermostat wire size

Wire Size	Maximum Wire Length
(Gauge)	Physical distance between Unit & T'stat
22	30 Feet
20	50 Feet
18	75 Feet
16	125 Feet
14	200 Feet

Setpoints

EDC Switch Wiring

Electromechanical Units: To enable the Evaporator Defrost Control Switch remove the "W3" jumper between LTB1-B1 and LTB1-B2 at the Outdoor Condenser Section.

ReliaTel Units: To enable the Evaporator Defrost Control Switch move wire "W11" from LTB2-B2 to LTB2-R, and move wire "W12" from LTB2-B1 to LTB2-CD at the Indoor Air Handler Section.

Note: *Refer to wiring schematics for more detail.*

Heating and Cooling Setpoint Arbitration

Figure 23. Discharge air cooling setpoint

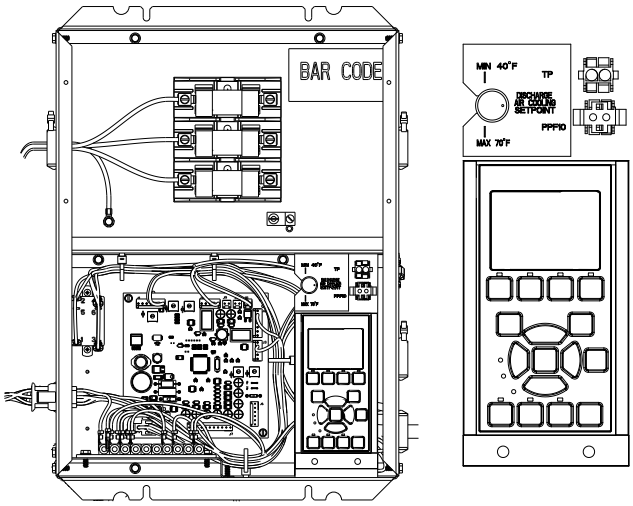

Single Zone VAV units will require traditional Zone Heating (if Heat installed) and Cooling Setpoints that are used on constant volume units in addition to two new setpoints: Discharge Air Cool (Externally Mounted Potentiometer in Control Box) and Discharge Air Heat (DA Heat R-42) Setpoint limits. The Zone Heating and Cooling Setpoints will be selectable via the existing RTRM customer connections for a Zone Sensor panel and the DA Heat and Cool Setpoints will be customer selectable via an onboard potentiometer on the RTOM, and an off board potentiometer mounted inside the control box with ranges 50-150°F and 40-90°F respectively.

The setpoint tables should be used as a reference when setting the DA Heat (R–42) and Discharge Air Cool (Control Box Mounted Potentiometer) setpoints. Note that the recommended settings for these setpoints are 100°F for the DA Heat Setpoint, and 50°F for the DA Cool Setpoint.

Table 9. DA heat setpoint

Voltage (Vdc)	Setpoint (°F)	Voltage (Vdc)	Setpoint (°F)	Voltage (Vdc)	Setpoint (°F)	Voltage (Vdc)	Setpoint (°F)
0.00	50	0.98	75	1.61	100	2.06	125
0.09	51	1.00	76	1.63	101	2.08	126
0.13	52	1.03	77	1.66	102	2.09	127
0.16	53	1.06	78	1.69	103	2.11	128
0.20	54	1.08	79	1.71	104	2.12	129
0.24	55	1.11	80	1.72	105	2.13	130
0.28	56	1.13	81	1.74	106	2.13	131
0.31	57	1.16	82	1.76	107	2.14	132
0.35	58	1.18	83	1.78	108	2.16	133
0.39	59	1.21	84	1.79	109	2.17	134
0.42	60	1.23	85	1.81	110	2.19	135
0.46	61	1.26	86	1.83	111	2.20	136
0.50	62	1.28	87	1.84	112	2.21	137
0.53	63	1.31	88	1.86	113	2.23	138
0.57	64	1.33	89	1.88	114	2.24	139
0.61	65	1.36	90	1.89	115	2.25	140

Table 9. DA heat setpoint (continued)

Voltage (Vdc)	Setpoint (ºF)	Voltage (Vdc)	Setpoint (ºF)	Voltage (Vdc)	Setpoint (ºF)	Voltage (Vdc)	Setpoint (ºF)
0.65	66	1.38	91	1.91	116	2.26	141
0.68	67	1.41	92	1.93	117	2.28	142
0.72	68	1.43	93	1.95	118	2.29	143
0.76	69	1.46	94	1.96	119	2.30	144
0.79	70	1.48	95	1.98	120	2.32	145
0.83	71	1.51	96	2.00	121	2.33	146
0.87	72	1.53	97	2.01	122	2.34	147
0.90	73	1.56	98	2.03	123	2.36	148
0.94	74	1.58	99	2.05	124	2.37	149
—	—	—	—	—	—	2.40	150

Table 10. DA cool setpoint (mounted above keyboard)

Setpoint (°F)	Voltage (Vdc)	Setpoint (°F)	Voltage (Vdc)	Setpoint (°F)	Voltage (Vdc)
40	<0.10	51	1.30	61	2.00
41	0.20	52	1.35	62	2.05
42	0.30	53	1.45	63	2.10
43	0.45	54	1.55	64	2.13
44	0.55	55	1.65	65	2.17
45	0.70	56	1.70	66	2.21
46	0.80	57	1.75	67	2.27
47	0.95	58	1.83	68	2.30
48	1.05	59	1.90	69	2.35
49	1.15	60	1.95	70	>2.40
50	1.25				

Note: The potentiometer voltage readings can be verified via the provided test points located next to each potentiometer. Use a DC voltmeter to the Vdc reading between those points and common.

Checkout Procedure

Complete the "Installation Checklist," p. 28 once installation of field wiring connections is complete. All operational checks (unit running) must be made after the outdoor unit is installed and system interconnection is complete.

Installation Checklist

⚠ WARNING

Hazardous Voltage!

Disconnect all electric power, including remote disconnects before servicing. Follow proper lockout/tagout procedures to ensure the power can not be inadvertently energized.

Complete this checklist once the unit is installed to verify that all recommended procedures have been accomplished before the system is started. Operational checks cannot be performed until the outdoor unit is installed and system interconnection is complete.

- ☐ Verify that the unit electrical power is disconnected.
- ☐ Inspect all field wiring connections. All connections should be clean and tight.
- ☐ Inspect unit ground connection(s). Ground must comply with all applicable codes.
- ☐ Inspect unit suspension arrangement (if used). Unit position must be secure. Remove any tools or debris found in or near the unit.
- ☐ Inspect duct outlets. Outlets must be open and unrestricted.
- ☐ Inspect unit drain lines. Pipe connections must be tight and drain line unrestricted.

- ☐ Inspect fan assembly to insure all moving parts move freely.
- ☐ If unit is horizontally mounted, make sure secondary drain pan has been installed.
- ☐ Inspect unit for proper filters, securely installed and not touching the coil surface. All cabinet panels must be secure.
- ☐ Instruct owner/operator on proper system operating and maintenance procedure.

Thermostat and Control Connections

Wiring shown with dashed lines is to be furnished and installed by the customer. All customer-supplied wiring must be copper only and must conform to NEC and local electrical codes. Codes may require line of sight between disconnect switch and unit.

1. Observe all notes on the wiring diagrams.
2. Mount the thermostat or zone sensor in the desired location.
3. Install color coded low voltage cables between outdoor unit, indoor unit and thermostat. For SZVAV units, install low voltage and communication wires between the RTRM in the condenser and the RTOM in the air handler. See schematic and connection print for more detail.
4. Connect low voltage control wiring to the low voltage terminal board located at the control box per the typical interconnecting wiring diagrams. For SZVAV units, connect the ReliaTel harness (supplied with the air handler), between the RTRM and RTOM. See Figure 24, p. 29.

Figure 24. RTOM to RTRM harness

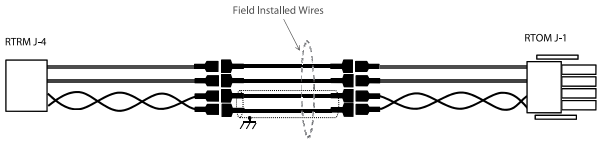

Electromechanical Controls

Wiring shown with dashed lines is to be furnished and installed by the customer. All customer supplied wiring must be copper only and must conform to NEC and local electrical codes. Codes may require line of sight between disconnect switch and unit.

Note: *When electric heater accessory is used, single point power entry or dual point power entry is field optional. Single point power entry option is through electric heater only.*

Figure 25. Electromechanical jobsite connections

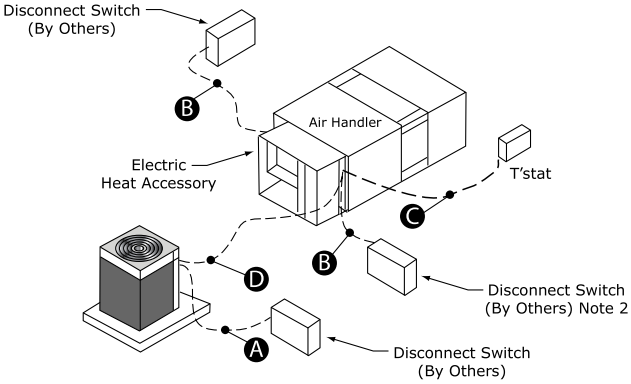

A. 3 power wires, line voltage for 3 phase, (2 power wires for single phase)
B. 3 power wires, line voltage for 3 phase, (2 power wires for single phase)
C. Cooling only thermostat: 3 to 7 wires depending on stages of electric heat
D. 3 to 7 wires depending on type of outdoor unit(s)

ReliaTel Controls

Wiring shown with dashed lines is to be furnished and installed by the customer. All customer supplied wiring must be copper only and must conform to NEC and local electrical codes. Codes may require line of sight between disconnect switch and unit.

Notes:

1. *When electric heater accessory is used, single point power entry or dual point power entry is field optional. Single point power entry option is through electric heater only.*
2. ****Choose only one of the following; Thermostat, Zone Sensor, or NSB Panel.*

Figure 26. ReliaTel jobsite connections

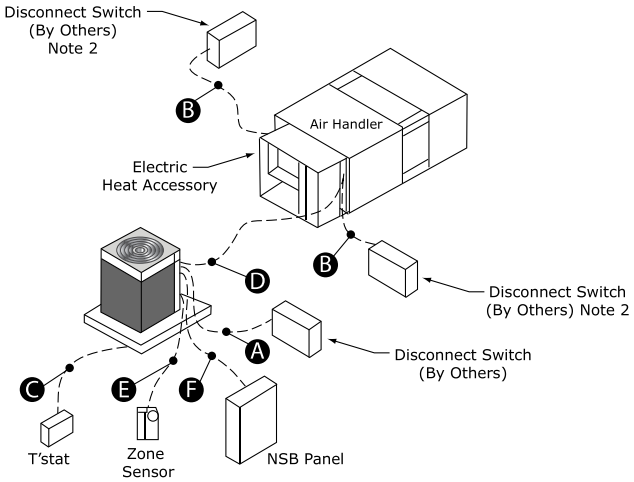

A. 3 power wires, line voltage for 3 phase, (2 power wires for single phase)
B. 3 power wires, line voltage for 3 phase, (2 power wires for single phase)
C. Cooling only thermostat: 3 to 7 wires depending on stages of electric heat
C. Heat Pump thermostat: 5 to 8 wires depending on stages of electric heat
D. 3 to 7 wires depending on type of outdoor unit(s)
E. Zone Sensor: 4 to 10 wires depending on zone sensor model[a]
F. Night Setback Panel: 7 wires

[a] For SZVAV air handlers: 4 additional wires are required (2 of which require twisted pair or shielded wire) in order to make connections between ReliaTel boards in the condenser and air handler.

Electrical Data

60 Hz Models

Includes Standard, SZVAV and 2–Speed VFD air handlers.

Table 11. Voltage operating range (all air handlers)

Model Number: Digit 8	Electrical Characteristics	Unit Operating Voltage Range
1	208-230/60/1	187-253
3	208-230/60/3	187-253
4	460/60/3	414-506
K	380/60/3	342-418
W	575/60/3	518-632

Table 12. Electrical characteristics — standard and low static motors — 60 Hz standard air handler

Tons	Unit Model Number	Standard Evaporator Fan Motor								Low Static Evaporator Fan Motor							
		No.	Volts	Phase	Hp	Amps		MCA	MFS	No.	Volts	Phase	Hp	Amps		MCA	MFS
						FLA	LRA							FLA	LRA		
5	TWE061D1, E1	1	208	1	0.75	6.0	41.0	7.5	15	N/A	N/A	N/A	N/A	N/A	N/A	N/A	N/A
	TWE061D1, E1	1	230	1	0.75	5.9	45.0	7.4	15	N/A	N/A	N/A	N/A	N/A	N/A	N/A	N/A
	TWE061D3, E3	1	208	3	0.75	2.5	16.4	3.1	15	N/A	N/A	N/A	N/A	N/A	N/A	N/A	N/A
	TWE061D3, E3	1	230	3	0.75	2.4	16.4	3.0	15	N/A	N/A	N/A	N/A	N/A	N/A	N/A	N/A
	TWE061D4, E4	1	460	3	0.75	1.2	8.2	1.5	15	N/A	N/A	N/A	N/A	N/A	N/A	N/A	N/A
	TWE061DW	1	575	3	0.75	1.3	6.1	1.6	15	N/A	N/A	N/A	N/A	N/A	N/A	N/A	N/A
7.5	TWE090D1, E1	1	208	1	1.5	6.8	31.5	8.5	20	N/A	N/A	N/A	N/A	N/A	N/A	N/A	N/A
	TWE090D1, E1	1	230	1	1.5	6.2	31.5	7.8	15	N/A	N/A	N/A	N/A	N/A	N/A	N/A	N/A
	TWE090D3, E3	1	208	3	1.5	5.3	34.3	6.6	15	N/A	N/A	N/A	N/A	N/A	N/A	N/A	N/A
	TWE090D3, E3	1	230	3	1.5	5.0	34.3	6.3	15	N/A	N/A	N/A	N/A	N/A	N/A	N/A	N/A
	TWE090DK, EK	1	380	3	1.5	3.0	20.2	3.8	15	N/A	N/A	N/A	N/A	N/A	N/A	N/A	N/A
	TWE090D3, E3	1	460	3	1.5	2.5	17.0	3.1	15	N/A	N/A	N/A	N/A	N/A	N/A	N/A	N/A
	TWE090DW, EW	1	575	3	1.5	1.8	13.6	2.3	15	N/A	N/A	N/A	N/A	N/A	N/A	N/A	N/A
10	TWE120D1, E1	1	208	1	2	8.5	57.4	10.6	20	N/A	N/A	N/A	N/A	N/A	N/A	N/A	N/A
	TWE120D1, E1	1	230	1	2	7.7	57.4	9.6	20	N/A	N/A	N/A	N/A	N/A	N/A	N/A	N/A
	TWE120D3, E3	1	208	3	2	7.0	33.9	7.8	15	N/A	N/A	N/A	N/A	N/A	N/A	N/A	N/A
	TWE120D3, E3	1	230	3	2	6.6	33.9	7.3	15	N/A	N/A	N/A	N/A	N/A	N/A	N/A	N/A
	TWE120DK, EK	1	380	3	2	3.3	28.0	4.1	15	N/A	N/A	N/A	N/A	N/A	N/A	N/A	N/A
	TWE120D3, E3[a]	1	460	3	2	3.3	19.0	3.6	15	N/A	N/A	N/A	N/A	N/A	N/A	N/A	N/A
	TWE120DW, EW	1	575	3	2	2.3	15.6	4.0	15	N/A	N/A	N/A	N/A	N/A	N/A	N/A	N/A
12.5	TWE150E3	1	208	3	2	6.0	23.0	7.4	15	N/A	N/A	N/A	N/A	N/A	N/A	N/A	N/A
	TWE150E3	1	230	3	2	5.5	23.0	6.9	15	N/A	N/A	N/A	N/A	N/A	N/A	N/A	N/A
	TWE150EK	1	380	3	2	3.3	28.0	4.1	15	N/A	N/A	N/A	N/A	N/A	N/A	N/A	N/A
	TWE150E3[a]	1	460	3	2	2.8	23.0	3.4	15	N/A	N/A	N/A	N/A	N/A	N/A	N/A	N/A
	TWE150EW	1	575	3	2	2.2	18.0	2.8	15	N/A	N/A	N/A	N/A	N/A	N/A	N/A	N/A
15	TWE180E3	1	208	3	3	9.4	74.9	11.8	20	N/A	N/A	N/A	N/A	N/A	N/A	N/A	N/A
	TWE180E3	1	230	3	3	9.2	74.9	11.5	20	N/A	N/A	N/A	N/A	N/A	N/A	N/A	N/A
	TWE180EK	1	380	3	5	8.1	63.5	10.1	15	N/A	N/A	N/A	N/A	N/A	N/A	N/A	N/A
	TWE180E3[a]	1	460	3	3	4.6	39.3	5.8	15	N/A	N/A	N/A	N/A	N/A	N/A	N/A	N/A
	TWE180EW	1	575	3	3	3.4	24.6	4.3	15	N/A	N/A	N/A	N/A	N/A	N/A	N/A	N/A

Table 12. Electrical characteristics — standard and low static motors — 60 Hz standard air handler (continued)

Tons	Unit Model Number	Standard Evaporator Fan Motor								Low Static Evaporator Fan Motor							
		No.	Volts	Phase	Hp	Amps		MCA	MFS	No.	Volts	Phase	Hp	Amps		MCA	MFS
						FLA	LRA							FLA	LRA		
20	TWE240E3	1	208	3	5	14.0	90.8	17.5	30	1	208	3	3	9.4	74.9	11.8	25
	TWE240E3	1	230	3	5	13.6	103.0	17.0	30	1	230	3	3	9.2	74.9	11.5	25
	TWE240EK	1	380	3	5	8.1	63.5	10.1	15	N/A	N/A	N/A	N/A	N/A	N/A	N/A	N/A
	TWE240E4	1	460	3	5	6.6	44.8	9.0	15	1	460	3	3	4.6	39.3	5.8	15
	TWE240EW	1	575	3	5	5.3	36.2	6.6	15	1	575	3	3	3.4	24.6	4.3	15
25	TWE300E3	1	208	3	7.5	19.6	150.0	25.0	40	1	208	3	7.5	19.6	150	25	40
	TWE300E3	1	230	3	7.5	17.8	150.0	25.0	40	1	230	3	7.5	17.8	150	25	40
	TWE300EK	1	380	3	7.5	10.9	72.9	13.6	20	N/A	N/A	N/A	N/A	N/A	N/A	N/A	N/A
	TWE300E4	1	460	3	7.5	8.9	75.0	12.0	20	1	460	3	7.5	8.9	75	12	20
	TWE300EW	1	575	3	7.5	7.1	60.0	9.0	15	1	575	3	7.5	7.1	60	9	15

Note: For additional information contact product support.

(a) Field wired for 460V.

Table 13. Electrical characteristics — high and ultra-high static motors — 60 Hz standard air handler

Tons	Unit Model Number	High Static Evaporator Fan Motor								Ultra-High Static Evaporator Fan Motor							
		No.	Volts	Phase	Hp	Amps		MCA	MFS	No.	Volts	Phase	Hp	Amps		MCA	MFS
						FLA	LRA							FLA	LRA		
5	TWE061D1, E1	1	208	1	1.5	6.8	31.5	8.5	20	N/A	N/A	N/A	N/A	N/A	N/A	N/A	N/A
	TWE061D1, E1	1	230	1	1.5	6.2	31.5	7.8	15	N/A	N/A	N/A	N/A	N/A	N/A	N/A	N/A
	TWE061D3, E3	1	208	3	1.5	5.3	34.3	6.6	15	N/A	N/A	N/A	N/A	N/A	N/A	N/A	N/A
	TWE061D3, E3	1	230	3	1.5	5	34.3	6.3	15	N/A	N/A	N/A	N/A	N/A	N/A	N/A	N/A
	TWE061D4, E4	1	460	3	1.5	2.5	17	3.1	15	N/A	N/A	N/A	N/A	N/A	N/A	N/A	N/A
	TWE061DW	1	575	3	1.5	1.8	13.6	2.3	15	N/A	N/A	N/A	N/A	N/A	N/A	N/A	N/A
7.5	TWE090D1, E1	1	208	1	2	8.5	57.4	10.6	20	N/A	N/A	N/A	N/A	N/A	N/A	N/A	N/A
	TWE090D1, E1	1	230	1	2	7.7	57.4	9.6	20	N/A	N/A	N/A	N/A	N/A	N/A	N/A	N/A
	TWE090D3, E3	1	208	3	2	7	33.9	7.8	15	1	208	3	3	9.4	74.9	11.8	25
	TWE090D3, E3	1	230	3	2	6.6	33.9	7.3	15	1	230	3	3	9.2	74.9	11.5	25
	TWE090D3, E3[a]	1	460	3	2	3.3	19	3.6	15	1	460	3	3	4.6	39.3	5.8	15
	TWE090DW, EW	1	575	3	2	2.3	15.6	4	15	1	575	3	3	3.4	24.6	4.3	15
10	TWE120D1, E1	N/A	N/A	N/A	N/A	N/A	N/A	N/A	N/A	N/A	N/A	N/A	N/A	N/A	N/A	N/A	N/A
	TWE120D1, E1	N/A	N/A	N/A	N/A	N/A	N/A	N/A	N/A	N/A	N/A	N/A	N/A	N/A	N/A	N/A	N/A
	TWE120D3, E3	1	208	3	3	9.4	74.9	11.8	25	N/A	N/A	N/A	N/A	N/A	N/A	N/A	N/A
	TWE120D3, E3	1	230	3	3	9.2	74.9	11.5	25	N/A	N/A	N/A	N/A	N/A	N/A	N/A	N/A
	TWE120D3, E3[a]	1	460	3	3	4.6	39.3	5.8	15	N/A	N/A	N/A	N/A	N/A	N/A	N/A	N/A
	TWE120DW, EW	1	575	3	3	3.4	24.6	4.3	15	N/A	N/A	N/A	N/A	N/A	N/A	N/A	N/A
12.5	TWE150E3	1	208	3	3	9.4	74.9	11.8	25	1	208	3	5	14	98	17.5	35
	TWE150E3	1	230	3	3	9.2	74.9	11.5	25	1	230	3	5	13.6	103	17	35
	TWE150E3[a]	1	460	3	3	4.6	39.3	5.8	15	1	460	3	5	6.6	44.8	8.3	20
	TWE150EW	1	575	3	3	3.4	24.6	4.3	15	1	575	3	5	5.2	36.2	6.5	15
15	TWE180E3	1	208	3	5	14	98	17.5	30	N/A	N/A	N/A	N/A	N/A	N/A	N/A	N/A
	TWE180E3	1	230	3	5	13.6	103	17	30	N/A	N/A	N/A	N/A	N/A	N/A	N/A	N/A
	TWE180E3[a]	1	460	3	5	6.6	44.8	8.3	15	N/A	N/A	N/A	N/A	N/A	N/A	N/A	N/A
	TWE180EW	1	575	3	5	5.2	36.2	6.5	15	N/A	N/A	N/A	N/A	N/A	N/A	N/A	N/A
20	TWE240E3	N/A	N/A	N/A	N/A	N/A	N/A	N/A	N/A	1	208	3	7.5	19.6	114	25	45
	TWE240E3	N/A	N/A	N/A	N/A	N/A	N/A	N/A	N/A	1	230	3	7.5	17.6	126	22	40
	TWE240E4	N/A	N/A	N/A	N/A	N/A	N/A	N/A	N/A	1	460	3	7.5	9	61.4	11.3	25
	TWE240EW	N/A	N/A	N/A	N/A	N/A	N/A	N/A	N/A	1	575	3	7.5	7.2	49.8	9	20

Table 13. Electrical characteristics — high and ultra-high static motors — 60 Hz standard air handler (continued)

Tons	Unit Model Number	High Static Evaporator Fan Motor								Ultra-High Static Evaporator Fan Motor							
		No.	Volts	Phase	Hp	Amps		MCA	MFS	No.	Volts	Phase	Hp	Amps		MCA	MFS
						FLA	LRA							FLA	LRA		
25	TWE300E3	1	208	3	7.5	19.6	150	25	40	N/A	N/A	N/A	N/A	N/A	N/A	N/A	N/A
	TWE300E3	1	230	3	7.5	17.8	150	25	40	N/A	N/A	N/A	N/A	N/A	N/A	N/A	N/A
	TWE300E4	1	460	3	7.5	8.9	75	12	20	N/A	N/A	N/A	N/A	N/A	N/A	N/A	N/A
	TWE300EW	1	575	3	7.5	7.1	60	9	15	N/A	N/A	N/A	N/A	N/A	N/A	N/A	N/A

Note: For additional information contact product support.

(a) Field wired for 460V.

Table 14. Electrical characteristics — standard and oversized motors — 60 Hz SZVAV and 2-Speed VFD air handler

Tons	Unit Model Number	Standard Evaporator Fan Motor								High Static Evaporator Fan Motor							
		No.	Volts	Phase	Hp	Amps		MCA	MFS	No.	Volts	Phase	Hp	Amps		MCA	MFS
						FLA	LRA							FLA	LRA		
7.5	TWE090E4	1	208	3	2	6.2	43.4	8	15	1	208	3	3	9.4	71	12	20
	TWE090E3	1	230	3	2	5.8	48	8	15	1	230	3	3	9.2	64	12	20
	TWE090E4	1	460	3	2	2.9	24	4	15	1	460	3	3	4.6	35.5	6	15
	TWE090E4	1	575	3	2	2.2	20.6	3	15	1	575	3	3	3.7	28.4	5	15
10	TWE120D3, E3	1	208	3	2	6.2	43.4	8	15	1	208	3	3	9.4	71	12	20
	TWE120D3, E3	1	230	3	2	5.8	48	8	15	1	230	3	3	9.2	64	12	20
	TWE120D4, E4	1	460	3	2	2.9	24	4	15	1	460	3	3	4.6	35.5	6	15
	TWE120DW, EW	1	575	3	2	2.2	20.6	3	15	1	575	3	3	3.7	28.4	5	15
12.5	TWE150E3	1	208	3	2	6.2	43.4	8	15	1	208	3	5	13.4	99.5	17	30
	TWE150E3	1	230	3	2	5.8	48	8	15	1	230	3	5	12.6	110	17	30
	TWE150E4	1	460	3	2	2.9	24	4	15	1	460	3	5	6.3	55	8	15
	TWE150EW	1	575	3	2	2.2	20.6	3	15	1	575	3	5	5.1	44	7	15
15	TWE180E3	1	208	3	3	9.4	71	12	20	1	208	3	5	13.4	99.5	17	30
	TWE180E3	1	230	3	3	9.2	64	12	20	1	230	3	5	12.6	110	17	30
	TWE180E4	1	460	3	3	4.6	35.5	6	15	1	460	3	5	6.3	55	8	15
	TWE180EW	1	575	3	3	3.7	28.4	5	15	1	575	3	5	5.1	44	7	15
20	TWE240E3	1	208	3	5	13.4	99.5	17	30	1	208	3	7.5	19.6	113.4	25	45
	TWE240E3	1	230	3	5	12.6	110	17	30	1	230	3	7.5	17.6	124	25	45
	TWE240E4	1	460	3	5	6.3	55	8	15	1	460	3	7.5	8.8	63	11	15
	TWE240EW	1	575	3	5	5.1	44	7	15	1	575	3	7.5	7.1	50.4	9	15
25	TWE300E3	1	208	3	7.5	19.6	113.4	25	45	N/A	N/A	N/A	N/A	N/A	N/A	N/A	N/A
	TWE300E3	1	230	3	7.5	17.6	124	25	45	N/A	N/A	N/A	N/A	N/A	N/A	N/A	N/A
	TWE300E4	1	460	3	7.5	8.8	63	12	20	N/A	N/A	N/A	N/A	N/A	N/A	N/A	N/A
	TWE300EW	1	575	3	7.5	7.1	50.4	9	15	N/A	N/A	N/A	N/A	N/A	N/A	N/A	N/A

Notes:
1. For additional information contact product support.
2. Not available with 380/60 Hz models.

Table 15. Unit wiring with electric heat (single point connection) — 5-25 ton standard air handlers — 60 Hz

Tons	Used With	Heater Model Number	Heater kW Rating	Unit Power Supply	Control Stages	Minimum Circuit Ampacity	Maximum Fuse or HACR Circuit Breaker Size
5	TWE061D1, TWE061E1	BAYHTRL106*	4.33/5.76	208-230/1/60	1	33.5/37.4	35.0/40.0
		BAYHTRL112*	8.65/11.52		1	59.5/67.4	60.0/70.0
		BAYHTRL117*	12.98/17.28		1	85.5/97.4	90.0/100.0
		BAYHTRL123*	17.31/23.04		2	111.5/127.4[a]	125.0/150.0
5	TWE061D3, TWE061E3	BAYHTRL305*	3.76/5.00	208-230/3/60	1	16.1/18.0	20.0/20.0
		BAYHTRL310*	7.48/9.96		1	29.0/33.0	30.0/35.0
		BAYHTRL315*	11.24/14.96		1	42.2/48.0	45.0/50.0
		BAYHTRL325*	18.72/24.92		2	68.0/77.9[a]	70.0/80.0
5	TWE061D4, TWE061E4	BAYHTRL405*	5.00	460/3/60	1	10.0	15.0
		BAYHTRL410*	9.96		1	17.0	20.0
		BAYHTRL415*	14.96		1	25.0	25.0
		BAYHTRL425*	24.92		2	40.0	40.0
5	TWE061DW	BAYHTRLW05*	5.00	575/3/60	1	8.0	15.0
		BAYHTRLW10*	9.96		1	15.0	15.0
		BAYHTRLW15*	14.96		1	21.0	20.0
		BAYHTRLW25*	24.92		2	33.0	35.0
7.5	TWE090D1, TWE090E1	BAYHTRL106*	4.33/5.76	208-230/1/60	1	34.5/37.8	40.0/40.0
		BAYHTRL112*	8.65/11.52		1	60.5/67.8[a]	70.0/70.0
		BAYHTRL117*	12.98/17.28		1	86.5/97.8	90.0/100.0
		BAYHTRL123*	17.31/23.04		2	112.5/127.8[a]	125.0/150.0
		BAYHTRL129*	21.63/28.80		2	138.6/157.8[a]	150.0/175.0
7.5	TWE090D3, TWE090E3	BAYHTRL305*	3.76/5.00	208-230/3/60	1	19.6/21.3	25.0/25.0
		BAYHTRL310*	7.48/9.96		1	32.5/36.2	35.0/40.0
		BAYHTRL315*	11.24/14.96		1	45.7/51.2	50.0/60.0
		BAYHTRL325*	18.72/24.92		2	71.5/82.0[a]	80.0/90.0
		BAYHTRL335*	26.20/34.88		2	98.7/112[b]	100.0/125.0
7.5	TWE090D3, TWE090E3[c]	BAYHTRL405*	5.00	460/3/60	1	11.0	15.0
		BAYHTRL410*	9.96		1	19.0	20.0
		BAYHTRL415*	14.96		1	26.0	30.0
		BAYHTRL425*	24.92		2	41.0	45.0
		BAYHTRL435*	34.88		2	56.0	60.0
7.5	TWE090DW, TWE090EW	BAYHTRLW05*	5.00	575/3/60	1	11.0	15.0
		BAYHTRLW10*	9.96		1	17.0	15.0
		BAYHTRLW15*	14.96		1	23.0	25.0
		BAYHTRLW25*	24.92		2	36.0	35.0
		BAYHTRLW35*	34.88		2	48.0	45.0
10	TWE120D1, TWE120E1	BAYHTRL106*	4.33/5.76	208-230/1/60	1	36.6/39.6	40.0/45.0
		BAYHTRL112*	8.65/11.52		1	62.6/69.6[a]	70.0/70.0
		BAYHTRL117*	12.98/17.28		1	88.6/99.6	90.0/100.0
		BAYHTRL123*	17.31/23.04		2	114.6/129.6[a]	125.0/150.0
		BAYHTRL129*	21.63/28.80		2	140.7/159.6[a]	150.0/175.0
10	TWE120D3, TWE120E3	BAYHTRL305*	3.76/5.00	208-230/3/60	1	21.0/23.0	25.0/30.0
		BAYHTRL310*	7.48/9.96		1	34.0/38.0	35.0/40.0
		BAYHTRL315*	11.24/14.96		1	47.0/53.0	50.0/60.0
		BAYHTRL325*	18.72/24.92		2	73.0/83.0[a]	80.0/90.0
		BAYHTRL335*	26.20/34.88		2	98.7/113.0[b]	100.0/125.0

Table 15. Unit wiring with electric heat (single point connection) — 5-25 ton standard air handlers — 60 Hz (continued)

Tons	Used With	Heater Model Number	Heater kW Rating	Unit Power Supply	Control Stages	Minimum Circuit Ampacity	Maximum Fuse or HACR Circuit Breaker Size
10	TWE120D3[c], TWE120E3[c]	BAYHTRL405*	5.00	460/3/60	1	12.0	15.0
		BAYHTRL410*	9.96		1	20.0	20.0
		BAYHTRL415*	14.96		1	27.0	30.0
		BAYHTRL425*	24.92		2	42.0	45.0
		BAYHTRL435*	34.88		2	57.0	60.0
10	TWE120DW, TWE120EW	BAYHTRLW05*	5.00	575/3/60	1	10.0	15.0
		BAYHTRLW10*	9.96		1	16.0	15.0
		BAYHTRLW15*	14.96		1	22.0	25.0
		BAYHTRLW25*	24.92		2	35.0	35.0
		BAYHTRLW35*	34.88		2	47.0	45.0
12.5	TWE150E3	BAYHTRM310A	7.51/10.00	208-230/3/60	1	33.5/36.9	35/40
		BAYHTRM320A	14.96/19.92		1	59.3/66.8	60/70
		BAYHTRM330A	22.47/29.92		2	85.5/96.8	90/100
		BAYHTRM350A	37.44/49.84		2	137.3/156.7	150/175
12.5	TWE150E3[c]	BAYHTRM410*	10.00	460/3/60	1	19.0	20.0
		BAYHTRM420*	19.92		1	34.0	35.0
		BAYHTRM430*	29.92		2	49.0	50.0
		BAYHTRM450*	49.84		2	79.0	80.0
12.5	TWE150EW	BAYHTRMW10*	10.00	575/3/60	1	15.0	15.0
		BAYHTRMW20*	19.92		1	27.0	30.0
		BAYHTRMW30*	29.92		2	39.0	40.0
		BAYHTRMW50*	49.84		2	63.0	70.0
15	TWE180E3	BAYHTRM310*	7.51/10.00	208-230/3/60	1	37.8/41.6	45.0/45.0
		BAYHTRM320*	14.96/19.92		1	63.7/71.4	70.0/80.0
		BAYHTRM330*	22.47/29.92		2	89.8/101.5	90.0/110.0
		BAYHTRM350*	37.44/49.84		2	141.6/161.4[b]	150.0/175.0
15	TWE180E3[c]	BAYHTRM410*	10.00	460/3/60	1	21.0	25.0
		BAYHTRM42*	19.92		1	36.0	40.0
		BAYHTRM430*	29.92		2	51.0	60.0
		BAYHTRM450*	49.84		2	81.0	90.0
15	TWE180EW	BAYHTRMW10*	10.00	575/3/60	1	17.0	20.0
		BAYHTRMW20*	19.92		1	30.0	30.0
		BAYHTRMW30*	29.92		2	42.0	45.0
		BAYHTRMW50*	49.84		2	67.0	70.0
20	TWE240E3	BAYHTRM310*	7.51/10.00	208-230/3/60	1	44.1/49.0	60.0/60.0
		BAYHTRM320*	14.96/19.92		1	71.0/79.0	80.0/90.0
		BAYHTRM330*	22.47/29.92		2	97.0/109.0	100.0/110.0
		BAYHTRM350*	37.44/49.84		2	149.0/169.0[b]	150.0/175.0
20	TWE240E4	BAYHTRM410*	10.00	460/3/60	1	24.0	30.0
		BAYHTRM420*	19.92		1	39.0	40.0
		BAYHTRM430*	29.92		2	54.0	60.0
		BAYHTRM450*	49.84		2	84.0	90.0
20	TWE240EW	BAYHTRMW10*	10.00	575/3/60	1	20.0	25.0
		BAYHTRMW20*	19.92		1	32.0	35.0
		BAYHTRMW30*	29.92		2	45.0	45.0
		BAYHTRMW50*	49.84		2	70.0	70.0

Table 15. Unit wiring with electric heat (single point connection) — 5-25 ton standard air handlers — 60 Hz (continued)

Tons	Used With	Heater Model Number	Heater kW Rating	Unit Power Supply	Control Stages	Minimum Circuit Ampacity	Maximum Fuse or HACR Circuit Breaker Size
25	TWE300E3	BAYHTRM310*	7.51/10	208-230/3/60	1	51.0/53.0	60.0/90.0
		BAYHTRM320*	14.96/19.92		1	77.0/83.0	85.0/90.0
		BAYHTRM330*	22.47/29.92		2	103.0/113.0	110.0/125.0
		BAYHTRM350*	37.44/49.84		2	155.0/173.0	175.0/175.0
25	TWE300E4	BAYHTRM410*	10.00	460/3/60	1	27.0	30.0
		BAYHTRM420*	19.92		1	42.0	45.0
		BAYHTRM430*	29.92		2	57.0	60.0
		BAYHTRM450*	49.84		2	87.0	90.0
25	TWE300EW	BAYHTRMW10*	10.00	575/3/60	1	22.0	25.0
		BAYHTRMW20*	19.92		1	34.0	35.0
		BAYHTRMW30*	29.92		2	47.0	50.0
		BAYHTRMW50*	49.84		2	72.0	80.0

Notes:

1. kW ratings are at: 208/240V for 208-230V air handlers; 480V for 460V air handlers; 600V for 575V air handlers. For other than rated voltage, capacity = (voltage/rated voltage)^2 x rated capacity.
2. Any power supply and circuits must be wired and protected in accordance with local codes.
3. Electric heat not available with 380/60 Hz models.
4. The HACR circuit breaker is for U.S.A. installations only.

(a) Field wire must be rated at least 75°C.
(b) Field wire must be rated at least 90°C.
(c) With motor field wired for 460V.

Table 16. Unit wiring with electric heat (single point connection) — 7.5-25 ton SZVAV and 2-Speed VFD air handlers — 60 Hz

Tons	Used With	Heater Model Number	Heater KW Rating	Unit Power Supply	Control Stages	Minimum Circuit Ampacity	Maximum Fuse or HACR Circuit Breaker Size
7.5	TWE090E3*3	BAYHTRL305*	3.76/5.00	208-230/3/60	1	21/23	25/25
		BAYHTRL310*	7.48/9.96		1	34/38	35/40
		BAYHTRL315*	11.24/14.96		1	47/53	50/60
		BAYHTRL325*	18.72/24.92		2	73/83	80/90
		BAYHTRL335*	26.20/34.88		2	99/113	100/125
7.5	TWE090E4*4	BAYHTRL305*	5.00	460/3/60	1	12	15
		BAYHTRL310*	9.96		1	19	20
		BAYHTRL315*	14.96		1	27	30
		BAYHTRL325*	24.92		2	42	45
		BAYHTRL335*	34.88		2	57	60
7.5	TWE090EW*3	BAYHTRLW05*	5.00	575/3/60	1	9	15
		BAYHTRLW10*	9.96		1	16	20
		BAYHTRLW15*	14.96		1	22	25
		BAYHTRLW25*	24.92		2	34	35
		BAYHTRLW35*	34.88		2	47	50
10	TWE120D3*3, E3*3	BAYHTRL305*	3.76/5.00	208-230/3/60	1	21/23	25/25
		BAYHTRL310*	7.48/9.96		1	34/38	35/40
		BAYHTRL315*	11.24/14.96		1	47/53	50/60
		BAYHTRL325*	18.72/24.92		2	73/83	80/90
		BAYHTRL335*	26.20/34.88		2	99/113	100/125

Table 16. Unit wiring with electric heat (single point connection) — 7.5-25 ton SZVAV and 2-Speed VFD air handlers — 60 Hz (continued)

Tons	Used With	Heater Model Number	Heater KW Rating	Unit Power Supply	Control Stages	Minimum Circuit Ampacity	Maximum Fuse or HACR Circuit Breaker Size
10	TWE120D3*4, E3*4	BAYHTRL305*	3.76/5.00	208-230/3/60	1	25/27	30/30
		BAYHTRL310*	7.48/9.96		1	38/42	40/45
		BAYHTRL315*	11.24/14.96		1	38/57	40/60
		BAYHTRL325*	18.72/24.92		2	77/87	80/90
		BAYHTRL335*	26.20/34.88		2	103/117	110/125
10	TWE120D4*3, E4*3	BAYHTRL405*	5.00	460/3/60	1	12	15
		BAYHTRL410*	9.96		1	19	20
		BAYHTRL415*	14.96		1	27	30
		BAYHTRL425*	24.92		2	42	45
		BAYHTRL435*	34.88		2	57	60
10	TWE120D4*4, E4*4	BAYHTRL405*	5.00	460/3/60	1	14	15
		BAYHTRL410*	9.96		1	21	25
		BAYHTRL415*	14.96		1	29	30
		BAYHTRL425*	24.92		2	44	45
		BAYHTRL435*	34.88		2	59	60
10	TWE120DW*3, EW*3	BAYHTRLW05*	5.00	575/3/60	1	9	15
		BAYHTRLW10*	9.96		1	16	20
		BAYHTRLW15*	14.96		1	22	25
		BAYHTRLW25*	24.92		2	34	35
		BAYHTRLW35*	34.88		2	47	50
10	TWE120DW*4, EW*4	BAYHTRLW05*	5.00	575/3/60	1	11	15
		BAYHTRLW10*	9.96		1	18	20
		BAYHTRLW15*	14.96		1	24	25
		BAYHTRLW25*	24.92		2	36	40
		BAYHTRLW35*	34.88		2	49	50
12.5	TWE150E3*3	BAYHTRM310*	7.51/10.00	208-230/3/60	1	34/38	35/40
		BAYHTRM320*	14.96/19.92		1	60/68	60/70
		BAYHTRM330*	22.47/29.92		2	86/98	90/100
		BAYHTRM350*	37.44/49.84		2	138/158	150/175
12.5	TWE150E3*4	BAYHTRM310*	7.51/10.00	208-230/3/60	1	43/47	45/50
		BAYHTRM320*	14.96/19.92		1	69/77	70/80
		BAYHTRM330*	22.47/29.92		2	95/107	100/110
		BAYHTRM350*	37.44/49.84		2	147/167	150/175
12.5	TWE150E4*3	BAYHTRM410*	10.00	460/3/60	1	19	20
		BAYHTRM420*	19.92		1	34	35
		BAYHTRM430*	29.92		2	49	50
		BAYHTRM450*	49.84		2	79	80
12.5	TWE150E4*4	BAYHTRM410*	10.00	460/3/60	1	23	25
		BAYHTRM420*	19.92		1	38	40
		BAYHTRM430*	29.92		2	53	60
		BAYHTRM450*	49.84		2	83	90
12.5	TWE150EW*3	BAYHTRMW10*	10.00	575/3/60	1	16	20
		BAYHTRMW20*	19.92		1	28	30
		BAYHTRMW30*	29.92		2	41	45
		BAYHTRMW50*	49.84		2	66	70

Table 16. Unit wiring with electric heat (single point connection) — 7.5-25 ton SZVAV and 2-Speed VFD air handlers — 60 Hz (continued)

Tons	Used With	Heater Model Number	Heater KW Rating	Unit Power Supply	Control Stages	Minimum Circuit Ampacity	Maximum Fuse or HACR Circuit Breaker Size
12.5	TWE150EW*4	BAYHTRMW10*	10.00	575/3/60	1	19	20
		BAYHTRMW20*	19.92		1	32	35
		BAYHTRMW30*	29.92		2	44	45
		BAYHTRMW50*	49.84		2	69	70
15	TWE180E3*3	BAYHTRM310*	7.51/10.00	208-230/3/60	1	38/42	40/45
		BAYHTRM320*	14.96/19.92		1	64/72	70/80
		BAYHTRM330*	22.47/29.92		2	90/102	90/110
		BAYHTRM350*	37.44/49.84		2	142/162	150/175
15	TWE180E3*4	BAYHTRM310*	7.51/10.00	208-230/3/60	1	43/47	45/50
		BAYHTRM320*	14.96/19.92		1	69/77	70/80
		BAYHTRM330*	22.47/29.92		2	95/107	100/110
		BAYHTRM350*	37.44/49.84		2	147/167	150/175
15	TWE180E4*3	BAYHTRM410*	10.00	460/3/60	1	21	25
		BAYHTRM420*	19.92		1	36	40
		BAYHTRM430*	29.92		2	51	60
		BAYHTRM450*	49.84		2	81	90
15	TWE180E4*4	BAYHTRM410*	10.00	460/3/60	1	23	25
		BAYHTRM420*	19.92		1	38	40
		BAYHTRM430*	29.92		2	53	60
		BAYHTRM450*	49.84		2	83	90
15	TWE180EW*3	BAYHTRMW10*	10.00	575/3/60	1	18	20
		BAYHTRMW20*	19.92		1	30	30
		BAYHTRMW30*	29.92		2	43	45
		BAYHTRMW50*	49.84		2	68	70
15	TWE180EW*4	BAYHTRMW10*	10.00	575/3/60	1	19	20
		BAYHTRMW20*	19.92		1	32	35
		BAYHTRMW30*	29.92		2	44	45
		BAYHTRMW50*	49.84		2	69	70
20	TWE240E3*3	BAYHTRM310*	7.51/10.00	208-230/3/60	1	43/47	45/50
		BAYHTRM320*	14.96/19.92		1	69/77	70/80
		BAYHTRM330*	22.47/29.92		2	95/107	100/110
		BAYHTRM350*	37.44/49.84		2	147/167	150/175
20	TWE240E3*4	BAYHTRM310*	7.51/10.00	208-230/3/60	1	51/55	60/60
		BAYHTRM320*	14.96/19.92		1	77/85	80/90
		BAYHTRM330*	22.47/29.92		2	103/115	110/125
		BAYHTRM350*	37.44/49.84		2	155/175	175/175
20	TWE240E4*3	BAYHTRM410*	10.00	460/3/60	1	23	25
		BAYHTRM420*	19.92		1	38	40
		BAYHTRM430*	29.92		2	53	60
		BAYHTRM450*	49.84		2	83	90
20	TWE240E4*4	BAYHTRM410*	10.00	460/3/60	1	26	30
		BAYHTRM420*	19.92		1	41	45
		BAYHTRM430*	29.92		2	56	60
		BAYHTRM450*	49.84		2	86	90

Table 16. Unit wiring with electric heat (single point connection) — 7.5-25 ton SZVAV and 2-Speed VFD air handlers — 60 Hz (continued)

Tons	Used With	Heater Model Number	Heater KW Rating	Unit Power Supply	Control Stages	Minimum Circuit Ampacity	Maximum Fuse or HACR Circuit Breaker Size
20	TWE240EW*3	BAYHTRMW10*	10.00	575/3/60	1	19	20
		BAYHTRMW20*	19.92		1	32	35
		BAYHTRMW30*	29.92		2	44	45
		BAYHTRMW50*	49.84		2	69	70
20	TWE240EW*4	BAYHTRMW10*	10.00	575/3/60	1	22	25
		BAYHTRMW20*	19.92		1	34	35
		BAYHTRMW30*	29.92		2	47	50
		BAYHTRMW50*	49.84		2	72	80
25	TWE300E3*3	BAYHTRM310*	7.51/10.00	208-230/3/60	1	51/55	60/60
		BAYHTRM320*	14.96/19.92		1	77/85	80/90
		BAYHTRM330*	22.47/29.92		2	103/115	110/125
		BAYHTRM350*	37.44/49.84		2	155/175	175/175
25	TWE300E4*3	BAYHTRM410*	10.00	460/3/60	1	26	30
		BAYHTRM420*	19.92		1	41	45
		BAYHTRM430*	29.92		2	56	60
		BAYHTRM450*	49.84		2	86	90
25	TWE300EW*3	BAYHTRMW10*	10.00	575/3/60	1	22	25
		BAYHTRMW20*	19.92		1	34	35
		BAYHTRMW30*	29.92		2	47	50
		BAYHTRMW50*	49.84		2	72	80

Notes:

1. kW ratings are at: 208/240V for 208-230V air handlers; 480V for 460V air handlers; 600V for 575V air handlers. For other than rated voltage, capacity = $(\text{voltage/rated voltage})^2$ x rated capacity.
2. Any power supply and circuits must be wired and protected in accordance with local codes.
3. Electric heat not available with 380/60 Hz models.
4. The HACR circuit breaker is for U.S.A. installations only.

50 Hz Models

Includes standard air handlers

Table 17. Electrical characteristics — standard motor — 50 Hz air handler

Tons	Unit Model Number	Standard Evaporator Fan Motor				
		No.	Volts	Phase	Amps	
					FLA	LRA
4.6	TWE051DD	1	380	3	1.4	8.0
		1	415	3	1.0	8.4
6.25	TWE076DD, ED	1	380	3	3.1	17.0
		1	415	3	3.2	16.8
8.33	TWE101DD, ED	1	380	3	3.4	17.3
		1	415	3	3.2	19.0
10.4	TWE126ED	1	380	3	3.2	35.0
		1	415	3	3.1	35.0
13	TWE156ED	1	380	3	4.0	33.1
		1	415	3	4.0	36.1
16.7	TWE201ED	1	380	3	8.0	43.2
		1	415	3	8.0	48.6
20.9	TWE251ED	1	380	3	7.5	71.0
		1	415	3	7.2	77.0

Table 18. Unit wiring — air handler — 50 Hz

Tons	Unit Model Number	Minimum Unit Operating Voltage Range	Maximum Fuse Circuit Ampacity Ampacity	Size or Maximum Circuit Breaker
4.6	TWE051DD	380/415	4	15
6.25	TWE076DD, ED	380/415	5	15
8.33	TWE101DD, ED	380/415	5	15
10.4	TWE126ED	380/415	5	15
13	TWE156ED	380/415	6	15
16.7	TWE201ED	380/415	10	15
20.9	TWE251ED	380/415	10	15

Table 19. Unit wiring with electric heat (single point connection) — air handlers

Heater Model No.	Heater kW Rating	To Use with Unit	Control Stages	Minimum Circuit Ampacity	Maximum Fuse Breaker Size
BAYHTRL405*	5	TWE051DD	1	13	15
BAYHTRL410*	9.96		1	22	25
BAYHTRL415*	14.96		1	31	35
BAYHTRL425*	24.92		2	49	50
BAYHTRL405*	5	TWE076DD, ED	1	14	15
BAYHTRL410*	9.96		1	23	25
BAYHTRL415*	14.96		1	32	35
BAYHTRL425*	24.92		2	50	50
BAYHTRL435*	34.88		2	68	70

Table 19. Unit wiring with electric heat (single point connection) — air handlers (continued)

BAYHTRL405*	5	TWE101DD, TWE101ED	1	14	15
BAYHTRL410*	9.96		1	23	25
BAYHTRL415*	14.96		1	32	35
BAYHTRL425*	24.92		2	50	50
BAYHTRL435*	34.88		2	68	70
BAYHTRM410*	10	TWE126ED	1	19	20
BAYHTRM420*	19.92		1	41	45
BAYHTRM430*	29.92		2	59	60
BAYHTRM450*	49.84		2	94	100
BAYHTRM410*	10	TWE156ED	1	23	25
BAYHTRM420*	19.92		1	41	45
BAYHTRM430*	29.92		2	59	60
BAYHTRM450*	49.84		2	95	100
BAYHTRM410*	10	TWE201ED	1	29	30
BAYHTRM420*	19.92		1	46	50
BAYHTRM430*	29.92		2	65	70
BAYHTRM450*	49.84		2	100	100
BAYHTRM410*	10	TWE251ED	1	29	30
BAYHTRM420*	19.92		1	46	50
BAYHTRM430*	29.92		2	65	70
BAYHTRM450*	49.84		2	100	100

Notes:

1. Field wire must be rated at least 167°F (75°C).
2. Field wire must be rated at least 194°F (90°C).
3. Heater kW ratings are at 400v for 3 phase, 400v air handlers.
4. For other than rated voltage, capacity = (voltage/rated voltage)2 x rated capacity and kW = (voltage/rated voltage) 2 rated kW.
5. Any power supply and circuits must be wired and protected in accordance with local codes.
6. MCA and Maximum Fuse Size is based on 400V.

Start-Up

Sequence of Operation

NOTICE

Equipment Damage!

Ensure the disconnect for the indoor air handler is closed before operating the system. Operating the outdoor unit without the indoor fan energized can cause unit trip-out on high pressure control and/or liquid flood back to the compressor.

Variable Air Volume Applications (SZVAV)

Supply Fan Mode Operation

Units configured for SZVAV control will utilize Supply Fan Mode selection as is currently implemented into ReliaTel controls for normal Zone Control and will be selectable between **AUTO** and **ON** via a connected Zone Sensor module or through BAS/Network controllers.

Supply Fan Mode Auto Operation

For active Cooling, and Heating operation the Supply Fan will be commanded **ON** and will ramp up to the appropriate minimum speed once the unit determines that there is a request for capacity control. Once the active request is cleared and all capacity is de-energized normal supply fan off delays as implemented on constant volume units will be in effect. During the Supply Fan Off-Delay, the supply fan will remain energized for the predetermined time at the previous unit function's minimum speed. All other cases which would bring the Supply Fan **ON** will function as on non-SZVAV units.

Supply Fan Mode ON Operation

For active unit control with the Supply Fan Mode set to **ON**, the unit will energize the Supply Fan and hold the Fan Speed output at minimum speed until there is a request for the fan speed to increase. This will hold true for all cases except during Unoccupied periods in which the Supply Fan Mode is forced to **AUTO** and will operate the Supply Fan as described above for all Cooling, and Heating requests.

Supply Air Temperature Control - Cooling

For Cooling operation the unit will control the active capacity outputs to meet a varying, calculated Discharge Air Setpoint that is calculated based on zone conditions in order to maintain the Zone Temperature to the active Zone Setpoint. Note that this setpoint will be clamped between the user selected DA Heat and DA Cool setpoints for compressor control. In general, as the zone temperature rises above the ZCSP, the Active Discharge Air Setpoint will be calculated down. This calculated setpoint is a direct indication of space demand and is also used to determine the proper supply fan speed to meet the space requirements. During active capacity control, the unit will utilize a +/- 3.5°F deadband around the active Discharge Air Setpoint to determine when to request additional cooling capacity. If the unit is maintaining the discharge air temperature within the +/- 3.5°F deadband around the calculated discharge air setpoint requirements, no additional capacity will be requested.

Occupied Cooling Operation

For normal Cooling operation, available Cooling capacity will be staged or modulated in order to meet the calculated discharge air setpoint between the user selected upper and lower limits. If the current active cooling capacity is controlling the discharge air within the deadband no additional Cooling capacity change will be requested. As the Discharge Air Temperature rises above the deadband the control will request additional capacity as required (additional compressor operation). As the Discharge Air Temperature falls below the deadband the algorithm will request a reduction in active capacity.

Compressor Cooling

Compressor output control and protection schemes will function similar to non-SZVAV units. Normal compressor HPC and LPC control will remain in effect as well as normal 3-minute minimum on, off, and inter-stage timers. Also, the condenser fans will be controlled similar to non-SZVAV units.

Cooling Sequence

If the control determines that there is a need for compressor stages in order to meet the discharge air requirements, once supply fan proving has been made, the unit will begin to stage compressors accordingly. Note that a 5 second delay will be enforced between the command for supply fan output operation and the command for compressor output operation. This delay is enforced to ensure that the supply fan is energized and ramping up to operating speed prior to energizing compressors.

As the zone cooling demand continues to increase, if additional capacity is required, the supply fan output will be modulated above minimum speed in order to meet the zone requirements. Note that the supply fan speed will remain at the compressor stage's associated minimum value until the control requires additional capacity to meet the zone demand.

As the cooling load in the zone decreases the control will reduce the speed of the fan down to minimum per compressor stage and control the compressor outputs accordingly. As the compressors begin to de-energize, the Supply Fan speed will fall back to the Cooling Stage's associated minimum fan speed but not below. As the load in the zone continues to drop, cooling

capacity will be reduced in order to maintain the calculated discharge air setpoint.

Cooling Stages Minimum Fan Speed

As the unit begins to stage compressors to meet the cooling demand, the following minimum Supply Fan Speeds will be utilized for each corresponding Cooling Stage. Note that the Supply Fan Speed will be allowed to ramp up beyond the minimum speed in order to meet the zone cooling demand. The minimum fan speed for units with 2 stages of DX Cooling will be 58% of the unit's full airflow capacity. At Stage 1 of DX Cooling the Fan Speed will be at a minimum of 58% and at Stage 2 of DX Cooling the Fan Speed will be at a minimum of 80%.

Occupied Heating Operation

Occupied Heating operation on units configured with SZVAV control will utilize two separate control methodologies based on heating configurations. For all "Staged" Heating types (Electric and Gas), the unit will utilize 100% full airflow during all active heating periods like traditional Constant Volume units. For Modulating Gas heat units, the unit will have the ability to control the discharge air temperature to the calculated discharge air heating setpoint in order to maintain the Zone Temperature to the Zone Heating setpoint.

Staged Heating Operation

For units configured with Mechanical or Auxiliary Heat once the control determines that there is an active heating capacity request, the unit will energize the Supply Fan and ramp up to full speed. The control methodology during Active Heating will be identical to traditional Constant Volume units; heating stages will be energized/de-energized to meet the Zone Heating demand. Note that all Electric staging sequences will be identical to Constant Volume units.

Unoccupied Cooling and Heating Operation

For SZVAV units, the unit will control Heating and Cooling, as during Occupied periods using the normal heating and cooling SZVAV algorithms. In Unoccupied periods the unit will utilize setback setpoints, and Auto fan mode operation as on normal Constant Volume units.

Failure and Overriding Conditions

Certain failure and overriding conditions require special handling of the Supply Fan Speed on units configured with SZVAV. See below for a list of these conditions:

1. **Supply Fan Proving Failure** - If a Supply Fan Proving failure is detected the Supply Fan will be de-energized after 40s of run time and the Fan Speed output will go to the corresponding minimum speed voltage.
2. **Zone Temperature Sensor Failure** - If the Active Zone Temperature input goes out of range, the unit will discontinue all Heating, Cooling, and Dehumidification operation.
3. **Supply Air Temperature Sensor Failure** - If the Supply Air Temperature input goes out of range, the unit will revert back to Full Airflow, Traditional CV control. The unit will call out a Supply Air Temperature Sensor Failure Alarm, the RTRM System LED will flash the 2-blink error code, and Cool LEDs will flash.

2–Speed VFD Applications

General Description of Functionality

Cooling Operation (DX Cooling)

Units with a 2-Speed VFD control scheme will utilize a thermostat's heating and cooling outputs to differentiate between high and low speed. When the unit receives a G or Y1 call from the thermostat the supply fan will run at the user selected low speed. Once the zone load demands the second stage of cooling, and the unit receives the Y2 call from the thermostat the supply fan will be signaled to run at the user selected high speed. All other compressor staging will be handled the same as all standard thermostat controlled units.

Heating Operation

Units with 2-Speed VFD controls will utilize traditional CV Heating control schemes with full airflow provided based on the customer selected VFD controlled maximum speed. When the unit receives the W1 call from the thermostat a relay will signal the supply fan to run at high speed. All the electric heaters that can be outfitted in the field are wired up to interlock W1 and W2 so the supply fan will always run at the user selected high speed during heat modes.

Maintenance

Perform all of the indicated maintenance procedures at the intervals scheduled. This will prolong the life of the unit and reduce the possibility of costly equipment failure.

Fan Belt Adjustment

⚠ WARNING

Rotating Components!

Disconnect all electric power, including remote disconnects before servicing. Follow proper lockout/tagout procedures to ensure the power can not be inadvertently energized.

The fan belts must be inspected periodically to assure proper unit operation. Replacement is necessary if the belts appear frayed or worn.

When removing or installing the new belts, do not stretch them over the sheaves. Loosen the belts using the belt tension adjustment bolts on the motor mounting base.

Once the new belts are installed, using a Browning or Gates tension gauge (or equivalent), adjust the belt tension as follows:

1. To determine the appropriate belt deflection:
   a. Measure the center-to-center shaft distance (in inches) between the fan and motor sheaves.
   b. Divide the distance measured in Step 1a by 64; the resulting value represents the amount of belt deflection that corresponds to the proper belt tension.
2. Set the large O-ring on the belt tension gauge at the deflection value determined in Step 1b.
3. Set the small O-ring at zero on the force scale of the gauge plunger.
4. Place the large end of the gauge at the center of the belt span; then depress the gauge plunger until the large O-ring is even with the top of the next belt or even with a straightedge placed across the fan and motor sheaves.
5. Remove the belt tension gauge. The small O-ring now indicates a number other than zero on the plunger's force scale. This number represents the force (in pounds) required to give the needed deflection.
6. Compare the "force" scale reading (Step 5) with the appropriate "force" value listed in the Belt tension table. If the "force" reading is outside the range, readjust the belt tension.

   Note: *Actual belt deflection "force" must not exceed the maximum "force" value shown in* *Figure 27, p. 44*.

   Recheck the belt tension at least twice during the first 2 to 3 days of operation. Belt tension may decrease until the new belts are "run in".

Figure 27. Belt tension gauge

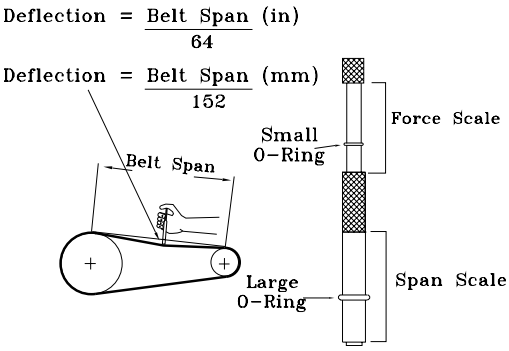

Table 20. Belt tension measurement and deflection

Belts Cross Section	Small Pitch Diameter Range	Deflection Force (Lbs.)			
		Standard V-Belt		V-Belt with Molded Notches	
		Min.	Max.	Min.	Max.
A	3.0 - 3.6	3	4-1/2	3-7/8	5-1/2
	3.8 - 4.8	3-1/2	5	4-1/2	6-1/4
	5.0 - 7.0	4	5-1/2	5	6-7/8
B	3.4 - 4.2	4	5-1/2	5-3/4	8
	4.4 - 5.6	5-1/8	7-1/8	6-1/2	9-1/8
	5.8 - 8.8	6-3/8	8-3/4	7-3/8	10-1/8

Monthly

The following warning complies with State of California law, Proposition 65.

⚠ WARNING

Hazardous Voltage w/Capacitors!

Disconnect all electric power, including remote disconnects and discharge all motor start/run capacitors before servicing. Follow proper lockout/tagout procedures to ensure the power cannot be inadvertently energized. For variable frequency drives or other energy storing components provided by Trane or others, refer to the appropriate manufacturer's literature for allowable waiting periods for discharge of capacitors. Verify with an appropriate voltmeter that all capacitors have discharged.

For additional information regarding the safe discharge of capacitors, see PROD-SVB06A-EN.

NOTICE

Operating Under Vacuum!

Do not operate or apply power to the compressor while under a vacuum.

⚠ WARNING

Fiberglass Wool!

You MUST wear all necessary Personal Protective Equipment (PPE) including gloves, eye protection, a NIOSH approved dust/mist respirator, long sleeves and pants when working with products containing fiberglass wool.

Precautionary Measures:

- **Avoid breathing fiberglass dust.**
- **Use a NIOSH approved dust/mist respirator.**
- **Avoid contact with the skin or eyes. Wear long-sleeved, loose-fitting clothing, gloves, and eye protection.**
- **Wash clothes separately from other clothing; rinse washer thoroughly.**
- **Operations such as sawing, blowing, tear-out, and spraying may generate fiber concentrations requiring additional respiratory protection. Use the appropriate NIOSH approved respirator.**

First Aid Measures:

- **Eye Contact - Flush eyes with water to remove dust. If symptoms persist, seek medical attention.**
- **Skin Contact - Wash affected areas gently with soap and warm water after handling.**

Conduct the following maintenance inspections once per month:

- ☐ Inspect air filters and clean (or replace) if necessary.
- ☐ Check unit wiring to ensure all connections are tight and that the wiring insulation is intact.
- ☐ Check drain pans and condensate piping to insure they are free of obstacles.
- ☐ Manually rotate the indoor fan to ensure proper operation.
- ☐ Inspect the evaporator coils for dirt and debris. If the coils appear dirty, clean them.
- ☐ Observe indoor fan operation and correct any unusual or excessive vibration. Clean blower wheels as needed.

Annually (Cooling Season)

The following maintenance procedures must be performed at the beginning of each cooling season to ensure efficient unit operation:

- ☐ Perform all of the monthly maintenance inspections.
- ☐ With the unit operating, check unit superheat and record the reading in the "Maintenance Log," p. 46
- ☐ Remove any accumulation of dust and/or dirt from the unit casing.
- ☐ Remove corrosion from any surface and repaint. Check the gasket around the control panel door to ensure it fits correctly and is in good condition to prevent water leakage.
- ☐ Inspect the evaporator fan belt. If it is worn or frayed, replace it.
- ☐ Inspect the control panel wiring to ensure that all connections are tight and that the insulation is intact.
- ☐ Check refrigerant piping and fittings for leaks.
- ☐ Inspect the evaporator coils for dirt and debris. If the coils appear dirty, clean them.

Coil Cleaning

Regular coil maintenance, including annual cleaning-enhances the unit's operating efficiency by minimizing:

- compressor head pressure and amperage draw
- water carryover
- fan brake horsepower
- static pressure losses

At least once each year — or more often if the unit is located in a "dirty" environment — clean the coil using the instructions outlined below. Be sure to follow these instructions as closely as possible to avoid damaging the coils.

Maintenance Log

Date	Ambient Temp. (°F)	Evaporator Entering Air		Compressor				Superheat (°F) (at compressor)		Subcooling (°F) (at service valve)	
		Dry Bulb	Wet Bulb	Suction Pressure		Discharge Pressure		Circuit #1	Circuit #2	Circuit #1	Circuit #2
				(C1)	(C2)	(C1)	(C2)				

Note: *Perform each inspection once per month (during cooling season) while unit is operating*

Wiring Diagram Matrix

Table 21. Wiring schematics for TWE air handlers

Model No.	Ton	Circuit	Volts	Hz	Ph	Electromechanical (Sd)	Electromechanical (2 speed)		Reliatel	
						Schematic/ Connection	Schematic	Connection	Schematic	Connection
TWE051DD	4.6	Single	380-415	50	3	2313-0401	N/A	N/A	N/A	N/A
TWE061D3	5	Single	208-230	60	3	2313-0401	N/A	N/A	N/A	N/A
TWE061D4	5	Single	460	60	3	2313-0401	N/A	N/A	N/A	N/A
TWE061DW	5	Single	575	60	3	2313-0401	N/A	N/A	N/A	N/A
TWE061DK	5	Single	380	60	3	2313-0401	N/A	N/A	N/A	N/A
TTA076DD	6.25	Single	380-415	50	3	2313-0401	N/A	N/A	N/A	N/A
TWE061D1	5	Single	208-230	60	1	2313-0402	N/A	N/A	N/A	N/A
TWE090D1	7.5	Single	208-230	60	1	2313-0402	N/A	N/A	N/A	N/A
TWE120D1	10	Single	208-230	60	1	2313-0402	N/A	N/A	N/A	N/A
TWE061E3	5	Dual	208-230	60	3	2313-0431	N/A	N/A	N/A	N/A
TWE061E4	5	Dual	460	60	3	2313-0431	N/A	N/A	N/A	N/A
TWE061EW	5	Dual	575	60	3	2313-0431	N/A	N/A	N/A	N/A
TWE061EK	5	Dual	380	60	3	2313-0431	N/A	N/A	N/A	N/A
TWE061E1	5	Dual	208-230	60	1	2313-0432	N/A	N/A	N/A	N/A
TWE090E1	7.5	Dual	208-230	60	1	2313-0432	N/A	N/A	N/A	N/A
TWE120E1	10	Dual	208-230	60	1	2313-0432	N/A	N/A	N/A	N/A
TWE090D3	7.5	Single	208-230	60	3	2313-0401	2313-0451	2313-0453	1213-1400	1213-1401
TWE090D4	7.5	Single	460	60	3	2313-0401	2313-0451	2313-0453	1213-1400	1213-1401
TWE090DW	7.5	Single	575	60	3	2313-0401	2313-0451	2313-0453	1213-1400	1213-1401
TWE090DK	7.5	Single	380	60	3	2313-0401	N/A	N/A	N/A	N/A
TWE090E3	7.5	Dual	208-230	60	3	2313-0431	2313-0451	2313-0453	1213-1400	1213-1401
TWE090E4	7.5	Dual	460	60	3	2313-0431	2313-0451	2313-0453	1213-1400	1213-1401
TWE090EW	7.5	Dual	575	60	3	2313-0431	2313-0451	2313-0453	1213-1400	1213-1401
TWE090EK	7.5	Dual	380	60	3	2313-0431	N/A	N/A	N/A	N/A
TWE101DD	8.33	Single	380-415	50	3	2313-0401	N/A	N/A	N/A	N/A
TWE101ED	8.33	Dual	380-415	50	3	2313-0431	N/A	N/A	N/A	N/A
TWE120D3	10	Single	208-230	60	3	2313-0401	2313-0451	2313-0453	1213-1400	1213-1401
TWE120DW	10	Single	575	60	3	2313-0401	2313-0451	2313-0453	1213-1400	1213-1401
TWE120DK	10	Single	380	60	3	2313-0401	N/A	N/A	N/A	N/A
TWE120E3	10	Dual	208-230	60	3	2313-0431	2313-0451	2313-0453	1213-1400	1213-1401
TWE120EW	10	Dual	575	60	3	2313-0431	2313-0451	2313-0453	1213-1400	1213-1401
TWE120EK	10	Dual	380	60	3	2313-0431	N/A	N/A	N/A	N/A
TWE126ED	10.4	Dual	380-415	50	3	2313-0431	N/A	N/A	N/A	N/A
TWE150E3	12.5	Dual	208-230	60	3	2313-0431	2313-0451	2313-0453	1213-1400	1213-1401
TWE150EW	12.5	Dual	575	60	3	2313-0431	2313-0451	2313-0453	1213-1400	1213-1401
TWE150EK	12.5	Dual	380	60	3	2313-0431	N/A	N/A	N/A	N/A
TWE156ED	13	Dual	380-415	50	3	2313-0431	N/A	N/A	N/A	N/A
TWE180E3	15	Dual	208-230	60	3	2313-0431	2313-0451	2313-0453	1213-1400	1213-1401
TWE180EW	15	Dual	575	60	3	2313-0431	2313-0451	2313-0453	1213-1400	1213-1401
TWE180EK	15	Dual	380	60	3	2313-0431	N/A	N/A	N/A	N/A
TWE201ED	16.7	Dual	380-415	50	3	2313-0431	N/A	N/A	N/A	N/A
TWE240E3	20	Dual	208-230	60	3	2313-0431	2313-0451	2313-0453	1213-1400	1213-1401
TWE240E4	20	Dual	380-415	60	3	2313-0431	2313-0451	2313-0453	1213-1400	1213-1401
TWE240EW	20	Dual	575	60	3	2313-0431	2313-0451	2313-0453	1213-1400	1213-1401
TWE240EK	20	Dual	380	60	3	2313-0431	N/A	N/A	N/A	N/A
TWE251ED	20.9	Dual	380-415	50	3	2313-0431	N/A	N/A	N/A	N/A

Table 21. Wiring schematics for TWE air handlers (continued)

Model No.	Ton	Circuit	Volts	Hz	Ph	Electromechanical (Sd)	Electromechanical (2 speed)		Reliatel	
						Schematic/ Connection	Schematic	Connection	Schematic	Connection
TWE300E3	25	Dual	208-230	60	3	2313-0431	2313-0451	2313-0453	1213-1400	1213-1401
TWE300E4	25	Dual	380-415	50	3	2313-0431	2313-0451	2313-0453	1213-1400	1213-1401
TWE300EW	25	Dual	575	60	3	2313-0431	2313-0451	2313-0453	1213-1400	1213-1401
TWE300EK	25	Dual	380	60	3	2313-0431	N/A	N/A	N/A	N/A

Note: Wiring diagrams are available through e-Library or by contacting your local sales office.

The manufacturer optimizes the performance of homes and buildings around the world. A business of Ingersoll Rand, the leader in creating and sustaining safe, comfortable and energy efficient environments, the manufacturer offers a broad portfolio of advanced controls and HVAC systems, comprehensive building services, and parts. For more information, visit www.IRCO.com.

The manufacturer has a policy of continuous product and product data improvements and reserves the right to change design and specifications without notice.

©2015 Trane All rights reserved

SSA-SVX06E-EN 02 Mar 2015
Supersedes SSA-SVX06D-EN (January 2014)

We are committed to using environmentally conscious print practices that reduce waste.